digital

212

MM11-DP

Engineering Drawings

Digital Equipment Corporation

FIELD MAINTENANCE PRINT SET

TABLE OF CONTENTS

B-TC-MM11-DP-3	MM11-DP PRINT SET TABLE OF CONTENTS
B-DD-MM11-DP	DRAWING DIRECTORY
D-CS-G652-Ø-1	16K X 18 BIT CORE MEMORY
D-TD-MM11-DP-2	TIMING DIAGRAM
D-UA-MM1 -DP-Ø	MM11-DP MEMORY MODULE ASSY
B-DD-H222-Ø	DRAWING DIRECTORY
D-C[illegible]-5411554-Ø-1	H222 STACK BOARD
D-UA-H222-A-Ø	H222 CORE MEMORY STACK ASSY
D-CS-M785Ø-0-1	PARITY CONTROLLER

UNIT VARIATIONS COVERED BY THIS PRINT SET
MM11-DP
MM11-D

MMII-DP

Field Maintenance Print Set

Digital Equipment Corporation

PRINT SET ORDER NO.
MP 00032

REVISIONS		
REV.	A	
CHG. NO.	MM11DP-1	
DATE	MAY 76	

USED ON OPTION/MODEL	
SHEET I OF 1	

DRN.	U. LUFKIN	DATE	24/OCT/75
CHK'D		DATE	24/OCT/75
PROJ. ENG.		DATE	10/23/
FIELD SERV.		DATE	

digital

TITLE: MM11-DP MEMORY MODULE

SIZE	CODE	NUMBER	REV.
B	TC	MM11-DP-3	A

DIST.

EN-01124-16-N675 (327)

DRB 124

digital EQUIPMENT CORPORATION MAYNARD MASSACHUSETTS

DRAWING DIRECTORY

CUSTOMER PRINT SET INDEX

SEQUENCE SEQUENCE

THIS IS PRINT SET

NOTE: FOR FIELD MAINTENANCE PRINT SET SEE:

B-TC-MM11-DP-3

UNIT VARIATIONS

VAR	TITLE	PRINT SET
MM11-DP	16K X 18 BIT MEMORY/MODULE	
MM11-D	16K X 16 BIT MEMORY/MODULE	

REVISIONS		
DATE	CHG. NO.	REV
MAY 76	MM11DP 1	A

USED ON OPTION/MODEL			
DRN. W ZUFKIN	DATE 27 OCT 75	TITLE MM11-DP MEMORY MODULE	
CHK'D. N Lupkin	DATE 27 OCT 75		
PROJ ENG. D. Smolen	DATE 10/28/75		
PROD. R.A. Hill	DATE 10/29/75	SIZE B	CODE DD
FIELD SERV. C Hillman	DATE 11/4/75	NUMBER MM11-DP	REV A
SHEET 1 OF 2		DIST	

DEC 16-(3251-1062-1A-R972

DRB 106

ELECTRICAL

CUSTOMER PRINT SET	MFG. SET	FIND NO.	DRAWING NO.	REV	NO OF SHT	DESCRIPTION	OPTION NO./FILE DATE
			B-TC-MM11-DP -3	A		MM11-DP FIELD MAINT. PRINT SET	
			MPØØØ32			MM11-DP PRINT SET	
			B-DD-MM11-DP			MM11-DP DRAWING DIRECTORY	
			D-TD-MM11-DP-2		2	MM11-DP TIMING DIAGRAM	
			D-CS-G652-Ø-1			16K X 18 BIT CORE MEMORY	

MECHANICAL

CUSTOMER PRINT SET	MFG SET	FIND NO.	DRAWING NO.	REV	NO OF SHT	DESCRIPTION	OPTION NO / FILE DATE
			D-UA-MM11-DP-Ø		1	MM11-DP MEMORY MODULE ASSY	
			D-UA-H222-A-Ø		1	H222 MEMORY STACK ASSY	

CUSTOMER PRINT SET CODES	
X =	PRINT OF DOCUMENT INCLUDED IN PRINT SET
C =	INCLUDES ALL PRINTS INDICATED ON DOCUMENT
S =	CONFIDENTIAL AUTHORIZED SIGNATURE REQUIRED

TITLE	SHEET	SIZE	CODE	NUMBER	REV
MM11-DP MEMORY MODULE	2 OF 2	B	DD	MM11-DP	A

DRB 108

digital EN-01062-2B-16-R972-(325)

BANK SELECTION

S.A. INTER-LEAVED	S.A. NON-INTER-LEAVED	EA+1	W1	W2	W3	W4
—	Ø	16K	OUT	OUT	OUT	IN
—	8K	24K	OUT	OUT	IN	OUT
Ø	16K	32K	OUT	OUT	IN	IN
8K	24K	40K	OUT	IN	OUT	OUT
16K	32K	48K	OUT	IN	OUT	IN
24K	40K	56K	OUT	IN	IN	OUT
32K	48K	64K	OUT	IN	IN	IN
40K	56K	72K	IN	OUT	OUT	OUT
48K	64K	80K	IN	OUT	OUT	IN
56K	72K	88K	IN	OUT	IN	OUT
64K	80K	96K	IN	OUT	IN	IN
72K	88K	104K	IN	IN	OUT	OUT
80K	96K	112K	IN	IN	OUT	IN
88K	104K	120K	IN	IN	IN	OUT
96K	112K	124K	IN	IN	IN	IN

SPARES

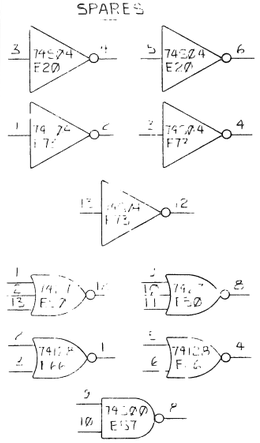

J180-1	+5V
J180-2	STACK E
J180-3	GND
J180-4	VTH
J180-5	STACK XY HI
J180-6	GND
J180-7	STACK XY LO

IC TYPE	GND	+5V	+20VSW
9301	1	-	
5641	8	16	
75325	8	9	16
7520	9	16	
74157	8	16	
74153	-	16	
7482	12	5	
7415	12	5	
7447	8	16	

GND AND 5V ARE USUALLY PIN 7 AND 14 RESPECTIVELY EXCEPTIONS ARE STATED ABOVE

IC PIN LOCATIONS

NOTES:

1. INTERLEAVE CONTROL IS ACHIEVED AS FOLLOWS:
   (A) NON-INTERLEAVED
   W5,W6 OUT
   (B) INTERLEAVED
   W5 IN, W6 OUT } ONE MEMORY
   W5 OUT, W6 IN } THE OTHER MEMORY
   (C) ADDRESS JUMPERS FOR THE COMBINED INTERLEAVED MEMORY ARE NOT THE SAME AS FOR THE NON-INTERLEAVED CASE (W1 THRU W4 MUST BE CUT THE SAME FOR BOTH INTERLEAVED MEMORIES). SEE BANK SELECTION CHART AT LEFT FOR BOTH INTERLEAVED AND NON-INTERLEAVED CASES.
2. UNDER NORMAL CONDITIONS (W8 OUT) THE MEMORY WILL NOT RESPOND TO ADDRESSES BETWEEN 124K AND 128K, BECAUSE THESE ADDRESSES ARE RESERVED FOR PERIPHERAL DEVICES ON THE UNIBUS. FOR SPECIAL APPLICATIONS WHERE THE RANGE OF PERIPHERAL ADDRESSES IS MORE RESTRICTED THAN THIS 4K RANGE THE MEMORY CAN BE CONFIGURED TO INCLUDE THE ADDITIONAL UNIBUS ADDRESSES AS FOLLOWS:
   W8 IN, W7 OUT } 124K TO 126K
   W8 IN, W7 IN } 124K TO 127K
   NOTE THAT FOR SYSTEMS WITHOUT MEMORY MANAGEMENT THIS MEANS THE USEFUL VIRTUAL ADDRESS SPACE FOR MEMORY CAN BE EXTENDED FROM 28K TO 30K OR 31K, BY SACRIFICING SOME PERIPHERAL SPACE.

   CAUTION
   SOME DIGITAL SOFTWARE MAY NOT BE COMPATABLE WITH THE REDUCED PERIPHERAL ADDRESS SPACE. TO ASSURE COMPATIBILITY W8 MUST BE OUT.
3. SCHEMATIC FOR H222 MEMORY STACK IS SHOWN ON CS 5411554-0-1.

MEMJ FIL 16-17 LOCK OUT	J78	
RB2	J152	STACK XY
J180-7	J79	STACK XY LO
J180-5	J80	STACK XY HI
+2.5V	J153	
+5V	J155	
MEMIX STACK CHG H	J149	
MEMIX STACK CHG H	J150	
LEI	J151	STACK V REF
GND	J9 J60	GND
GND	J26 J77	GND
GND	J43 J154	GND

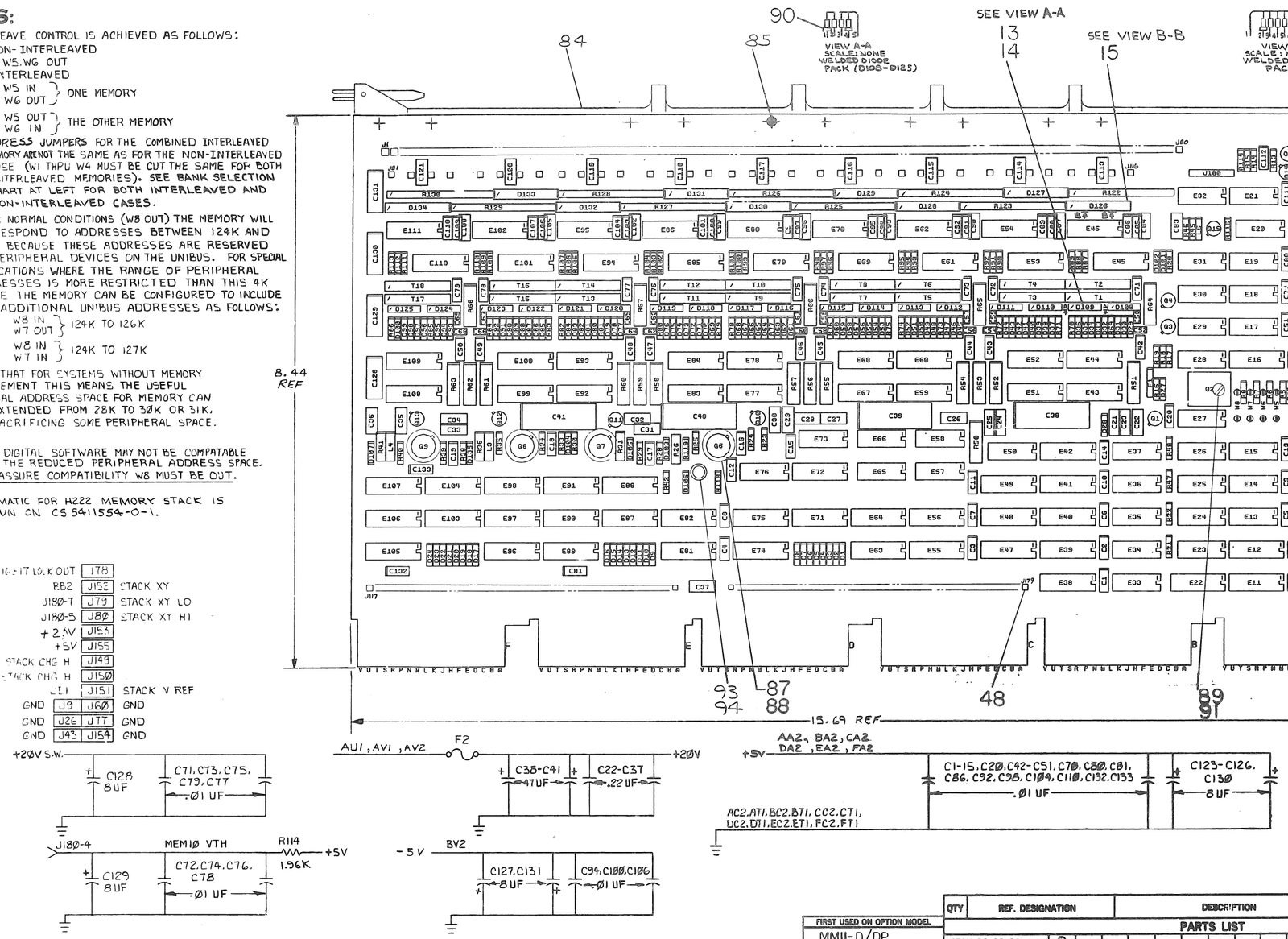

BUS GRANT LINES

DK2	DL2
DM2	DN2
DP2	DR2
DS2	DT2

FIRST USED ON OPTION MODEL
MMII-D/DP

QTY	REF. DESIGNATION	DESCRIPTION	PART NO.	ITEM NO.

PARTS LIST

ETCH BOARD REV. D

DEC NO.	EIA NO.	DEC NO.	EIA NO.

SEMICONDUCTOR CONVERSION CHART

REV.	CHANGE NO.	CHK	
C	G652-00001		D. SMELSER 10-13-75
D	G652-00002		D. SMELSER 3/4/76

REVISIONS

DRN. D. SMELSER 5/3/76
ENG. D. SMELSER
CHKD. 3/4/76
DATE 6-9-75
DATE 7/17/75
DATE 7/21/75
DATE 7/21/75
DATE 7/21/75
NEXT HIGHER ASSY —
SCALE —
SHEET OF 11

digital

TITLE 16K X 18 MEMORY ELECTRONICS

SIZE D CODE CS NUMBER G652-0-1 REV. D

DIST.

DEC FORM NO. DRD 135.8

PARTS LIST

QTY	REF. DESIGNATIONS	DESCRIPTION	PART NO.	ITEM NO.
REF		ASSY/DRILLING HOLE LAYOUT	D-AH-G652-0-5	1
REF		MODULE ECO HISTORY	B-MH-G652-0-6	2
1		ETCHED CIRCUIT BOARD	5011492	3
2	C82,C83	CAPACITOR, 82 pf, 100V, 5%, DM	1000015-00	4
1	C111	CAPACITOR, 22 pf, 100V, 5%, DM	1005820-00	5
22	C16 THRU C19,C84,C87,C90,C93 C96,C99,C102,C105,C108,C113 THRU C121	CAPACITOR, 120 pf, 100V, 5%, DM	1000018-00	6
18	C52 THRU C69	CAPACITOR, 5600 pf, 50V, 10%, CER	1011740-00	7
4	C38 THRU C41	CAPACITOR, 47 uf, 30V, AL EL	1012219-00	8
60	C1 THRU C15,C20,C21,C42 THRU C51,C70 THRU C81,C86,C88,C89 C91,C92,C94,C95,C97,C98,C100 C101,C103,C104,C106,C107,C85, C109,C110,C112,C132,C133	CAPACITOR, .01 uf, 50V, 20%, CER	1001610-00	9
16	C22 THRU C37	CAPACITOR, .22 uf, 50V +80%, -20%, CER	1010274-00	10
9	C123 THRU C131	CAPACITOR, 8 uf, 25V, AL EL	1012084-01	11
1	D28	DIODE ZENER IN751A 5.1V, 5%	1110994-00	12
9	D109,D111,D113,D115,D117, D119,D121,D123,D125	DIODE PACK COMMON CATHODE	7010918-0-0	13
9	D108,D110,D112,D114,D116, D118,D120,D122,D124	DIODE PACK COMMON ANODE	7010918-0-1	14
9	D126 THRU D134	DIODE PACK COMMON CATHODE	7010918-0-2	15
105	D1 THRU D27,D29 THRU D104, D107, D135	DIODE D672	1105275-00	16
1	D106	DIODE ZENER IN756A, 8.2V, 5%	1103441-00	17
1	D105	DIODE ZENER IN4742, 12V, 10%, 1W	1109502-00	18
18	R51 THRU R68	RESISTOR, 21, 3W, 1% WW	1311738-01	19
2	R16,R17	RESISTOR, 75, 1/4W, 5%	1302379-00	20
6	R25,R30,R35,R40,R43,R46	RESISTOR, 100, 1/4W, 5%	1300229-00	21
1	R50	RESISTOR, 220, 3W, 1%, WW	1312123-00	22
24	R23,R28,R33,R38,R87,R88,R91 THRU R94,R97 THRU R100,R103 THRU R106,R109 THRU R112, R115,R116	RESISTOR, 1K, 1/4W, 5%	1300365-00	23
1	R114	RESISTOR, 1.96K, 1/4W, 1%	1304833-00	24
1	R47	RESISTOR, 3.16K, 1/8W, 1%	1303045-00	25
1	R49	RESISTOR, 3.3K, 1/4W, 5%	1300439-00	26
1	R19	RESISTOR, 4.7K, 1/4W, 5%	1300447-00	27
1	R48	RESISTOR, 4.99K, 1/8W, 1%	1305324-00	28
9	R89,R90,R95,R96,R101,R102, R107,R108,R113	RESISTOR, 9.09K, 1/8W, 1%	1304855-00	29
16	R1 THRU R8,R18,R20,R21,R22, R24,R29,R34,R39	RESISTOR, 10K, 1/4W, 5%	1300479-00	30
2	R13,R14	RESISTOR, 14.7K, 1/8W, 1%	1302941-00	31
1	R1	RESISTOR, 27K, 1/4W, 5%	1305346-00	32
1	R9	RESISTOR, 56K, 1/4W, 5%	302395-00	33
1	R15	RESISTOR, 120K, 1/4W, 5%	1300539-00	34
1	R11	RESISTOR, 15K 1/4W, 5%	12 C496-00	35
18	R69 THRU R86	RESISTOR, 150, 1/4W, 5%	1300250-00	36
3	R45,R44,R119	RESISTOR, 47, 1/4W, 5%	1300202-00	37
2	R120,R121	RESISTOR, 56, 1/4W, 5%	1302602-00	38
1	R31	RESISTOR, 13, 1W, 1% WW	1312466-03	39
1	R118	RESISTOR, 750, 1/4W, 5%	1301401-00	40
1	R42	RESISTOR, 30, 1/4W, 5%	1302751-00	41
1	R12	RESISTOR, 4.64K, 1/8W, 1%	1304866-00	42
2	R26,R41	RESISTOR, 11, 1W WW	1312466-01	43
1	R36	RESISTOR, 12, 1W WW	1312466-02	44
9	R122 THRU R130	RESISTOR PACK, 100, 1/8W, 1%	1311741-00	45
1	F1	FUSE, PICO 1 AMPERE	1210929-02	46
1	F2	FUSE, PICO 5 AMPERE	1205747-00	47

PARTS LIST

QTY	REF. DESIGNATIONS	DESCRIPTION	PART NO.	ITEM NO.
179	J1 THRU J179	RECEPTACLE, SINGLE	1211720-00	48
1	J180	CONNECTOR, 7 PIN	1212104-00	49
2	Q14,Q15	TRANSISTOR, 3009B	1503100-00	50
2	Q3,Q4	TRANSISTOR, 6534B	1503409-01	51
5	Q5, Q10 THRU Q13	TRANSISTOR, 4258	1505321-00	52
1	Q1	TRANSISTOR, 6531B	1509330-00	53
4	Q6 THRU Q9	TRANSISTOR, 3762	1509649-01	54
1	Q2	TRANSISTOR, MJE 3055	1510555-00	55
18	T1 THRU T18	TRANSFORMER, INHIBIT DUAL	1612119-00	56
2	L3,L4	INDUCTOR, 0.47 uh, 10%	1610999-00	57
2	L5,L6	INDUCTOR, 100 uh	1610602-00	58
2	E9,E31	DELAY LINE, 250 NS	1611243-00	59
2	E26,E37	I.C. DEC 7400	1905575-00	60
1	E76	I.C. DEC 7406	1910741-00	61
1	E50	I.C. DEC 7427	1910870-00	62
1	E7	I.C. DEC 7430	1905578-00	63
2	E32,E65	I.C. DEC 7437	1910001-00	64
5	E49,E64,E82,E88,E97	I.C. DEC 7442	1910046-00	65
4	E39 THRU E42	I.C. DEC 7475	1909050-00	66
1	E6	I.C. DEC 7483	1909932-00	67
1	E10	I.C. DEC 74121	1910230-00	68
3	E8,E30,E66	I.C. DEC 74128	1912068-00	69
1	E16	I.C. DEC 74153	1909037-00	70
1	E72	I.C. DEC 74157	1910855-03	71
1	E19	I.C. DEC 74H50	1909080-00	72
3	E18,E27,E57	I.C. DEC 74S00	1910532-00	73
5	E3,E4,E13,E14,E23	I.C. DEC 74S03	1910533-00	74
6	E5,E15,E17,E20,E24,E73	I.C. DEC 74S04	1910534-00	75
1	E21	I.C. DEC 74S10	1910536-00	76
1	E28	I.C. DEC 74S20	1910539-00	77
1	E58	I.C. DEC 74S74	1910544-00	78
18	E45,E46,E53,E54,E61,E62,E69 E70,E79,E80,E85,E86,E94,E95 E101,E102,E110,E111	I.C. DEC 7520	1911748-00	79
38	E43,E44,E47,E48,E51,E52,E55 E56,E59,E60,E63,E67,E68,E71 E74,E75,E77,E78,E81,E83,E84 E87,E89 THRU E93,E96,E98 THRU E100,E103 THRU E109	I.C. DEC 75325	1910960-00	80
5	E25,E33 THRU E36	I.C. DEC 8640	1911468-00	81
6	E1,E2,E11,E12,E22,E38	I.C. DEC 8641	1911579-00	82
1	E29	I.C. DEC 8885	1910849-00	83
1		HANDLE	1210711-02	84
12		EYELET (HANDLE)	9006732-00	85
22		EYELET (SPLIT LUGS)	9006735-00	86
4	(USE WITH Q6 THRU Q9)	HEAT SINK, RED	1210001-00	87
4	(USE WITH Q6 THRU Q9)	TRANSIPAD	9007201-00	88
1		SCREW PPH #4-40 x 3/8	9006011-01	89
54		DIODE ASSEMBLY SPACER	9107771-00	90
1		NUT, KEP #4-40	9006557-00	91
	(SEE NOTES AND CHART SHEET #1)	WIRE, #22 AWG (SOLID)	9007560-01	92
1		SPACER, THD, ROUND #4-40 X 3/8	9006968-00	93
1		SCREW, NYLON, BINDER -D #4-40 X 3/8	9006401-04	94

REVISIONS

CHK	CHANGE NO	REV

TITLE	SIZE	CODE	NUMBER	REV.
16K X 18 MEMORY ELECTRONICS	D	CS	G652-0-1	D
SCALE —	SHEET 2 OF 11		DIST.	

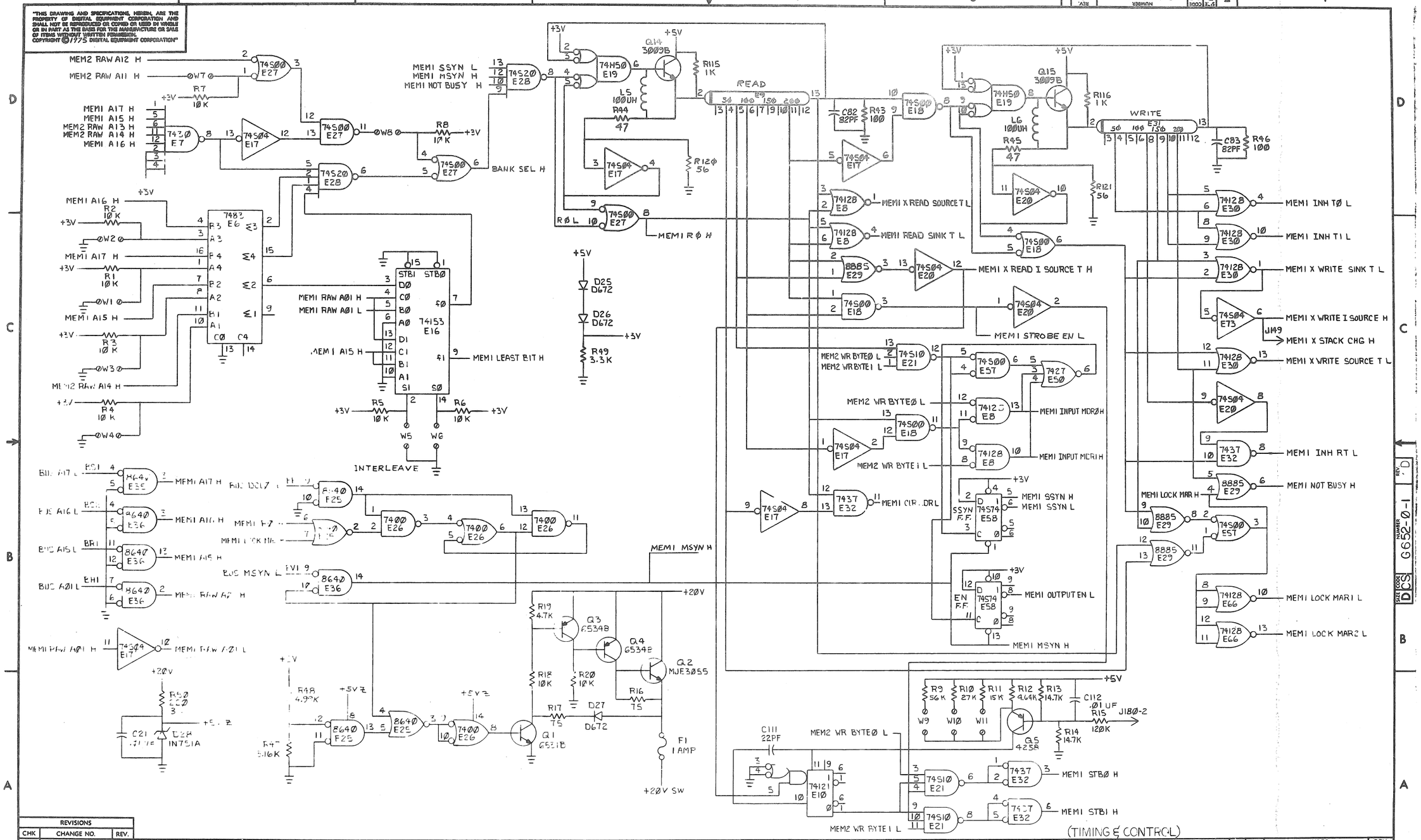

REVISIONS		
CHK	CHANGE NO.	REV.

TITLE	SIZE	CODE	NUMBER	REV.
16K X18 MEMORY ELECTRONICS (MEM1)	D	CS	G652-0-1	D
SCALE —	SHEET 3 OF 11	DIST.		

DEC FORM NO. DRD 138

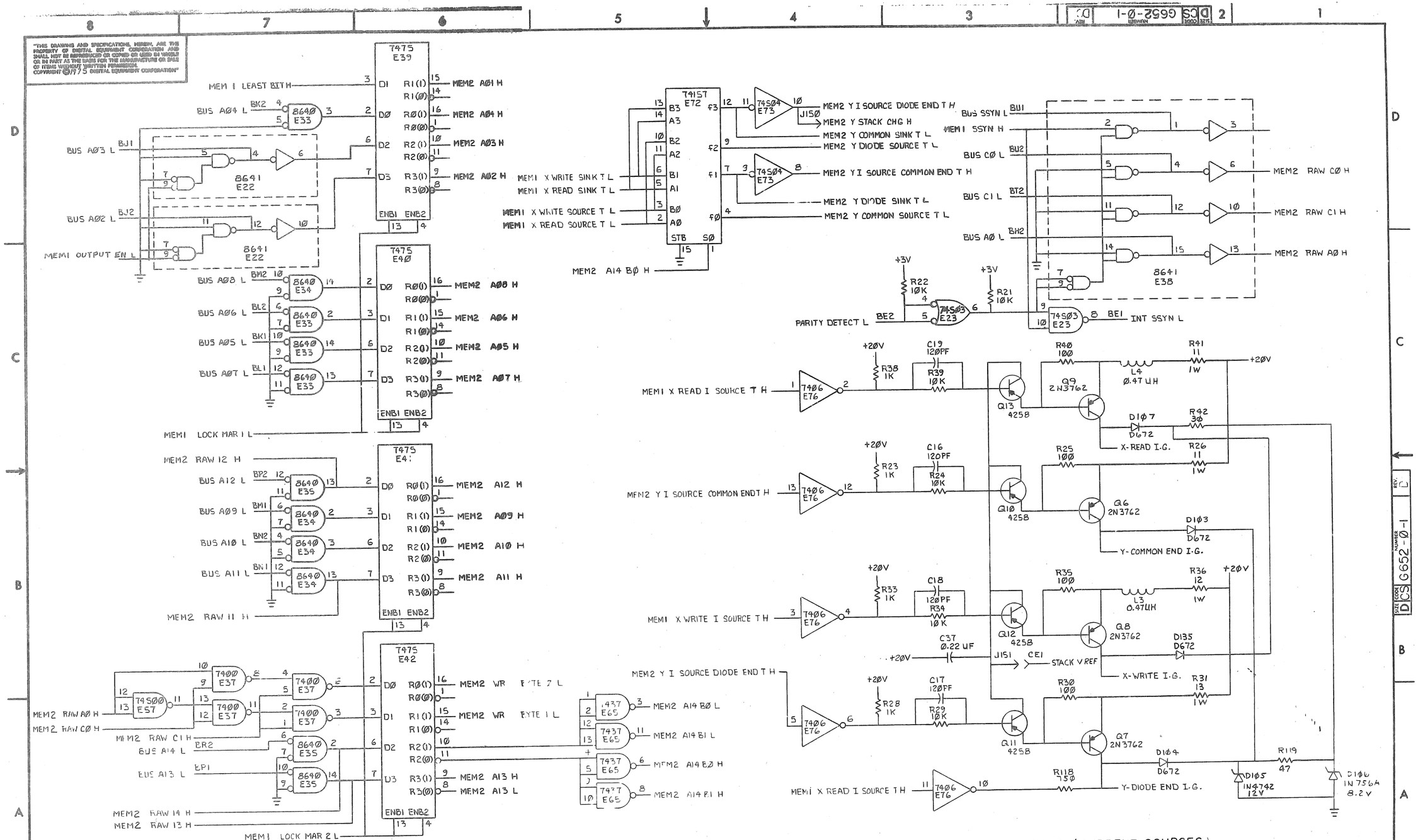

(MAR & CURRENT SOURCES)

REVISIONS		
CHK	CHANGE NO.	REV.

TITLE	SIZE	CODE	NUMBER	REV.
16K x 18 MEMORY ELECTRONICS (MEM2)	D	CS	G652-0-1	D
SCALE — / /	SHEET 4 OF 11	DIST.		

DEC FORM NO. 0110 1 2 3

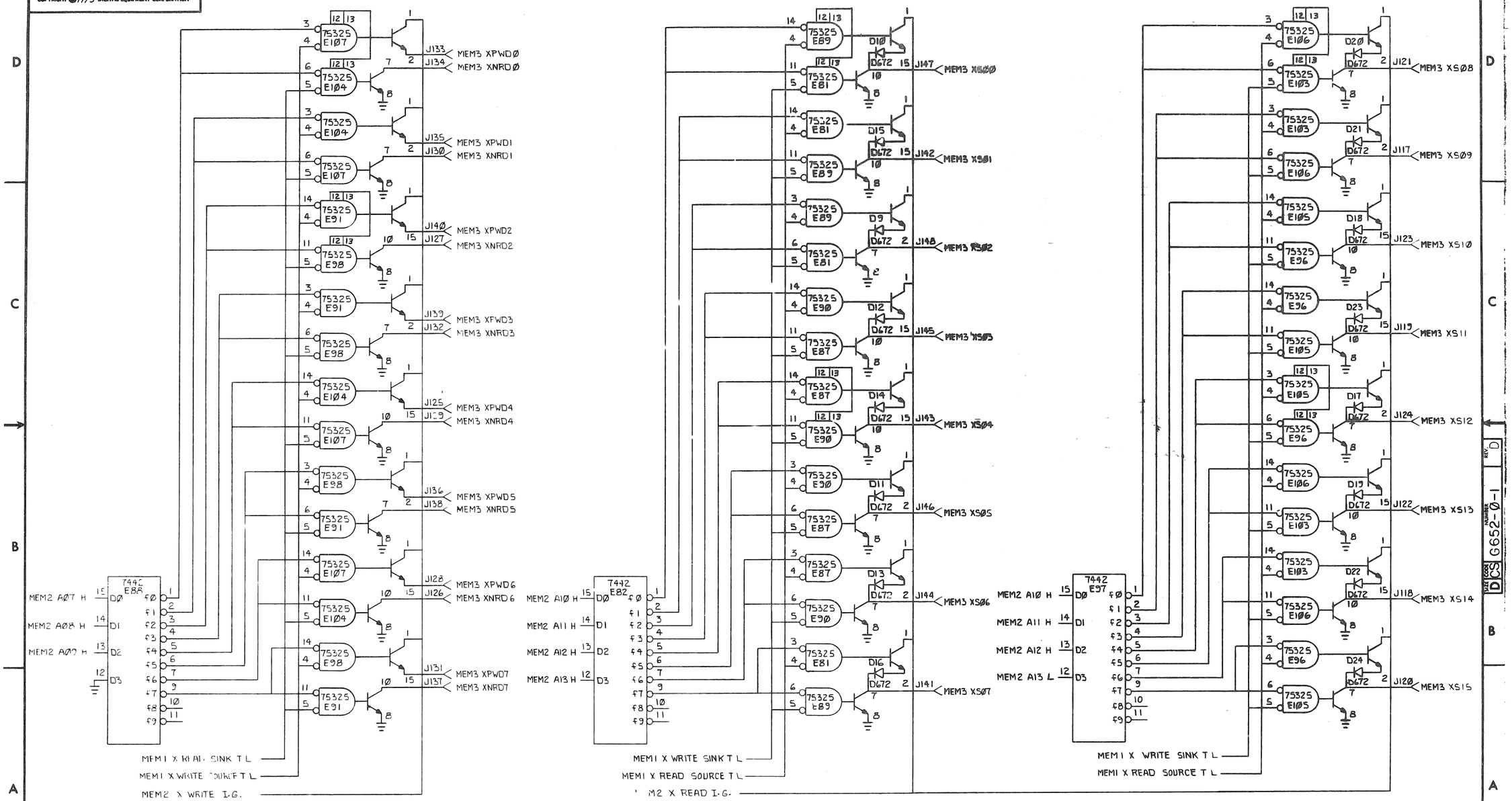

REVISIONS		
CHK	CHANGE NO.	REV.

(X DRIVE)

TITLE 16K x 18 MEMORY ELECTRONICS (MEM 3)

SIZE D | CODE CS | NUMBER G652-0-1 | REV. D

SCALE — | SHEET 5 OF 11 | DIST.

DEC FORM NO. DRD 138

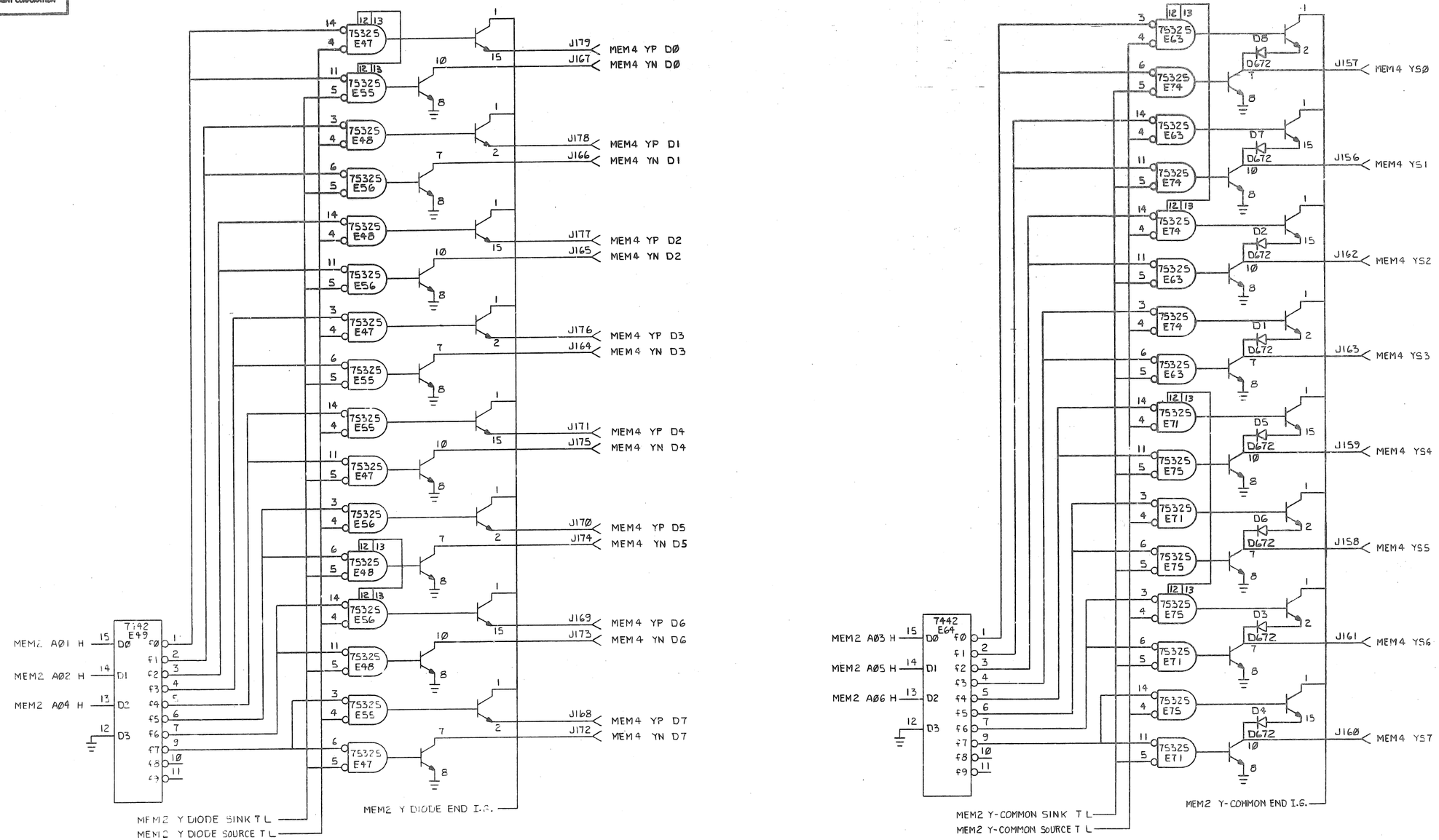

REVISIONS		
CHK	CHANGE NO.	REV.

(Y DRIVE)

TITLE	SIZE	CODE	NUMBER	REV.
16K x 18 MEMORY ELECTRONICS (MEM4)	D	CS	G652-0-1	D
SCALE —	SHEET 6 OF 11	DIST.		

DEC FORM NO. DRD 130

* MOUNTED ON H222 BD:

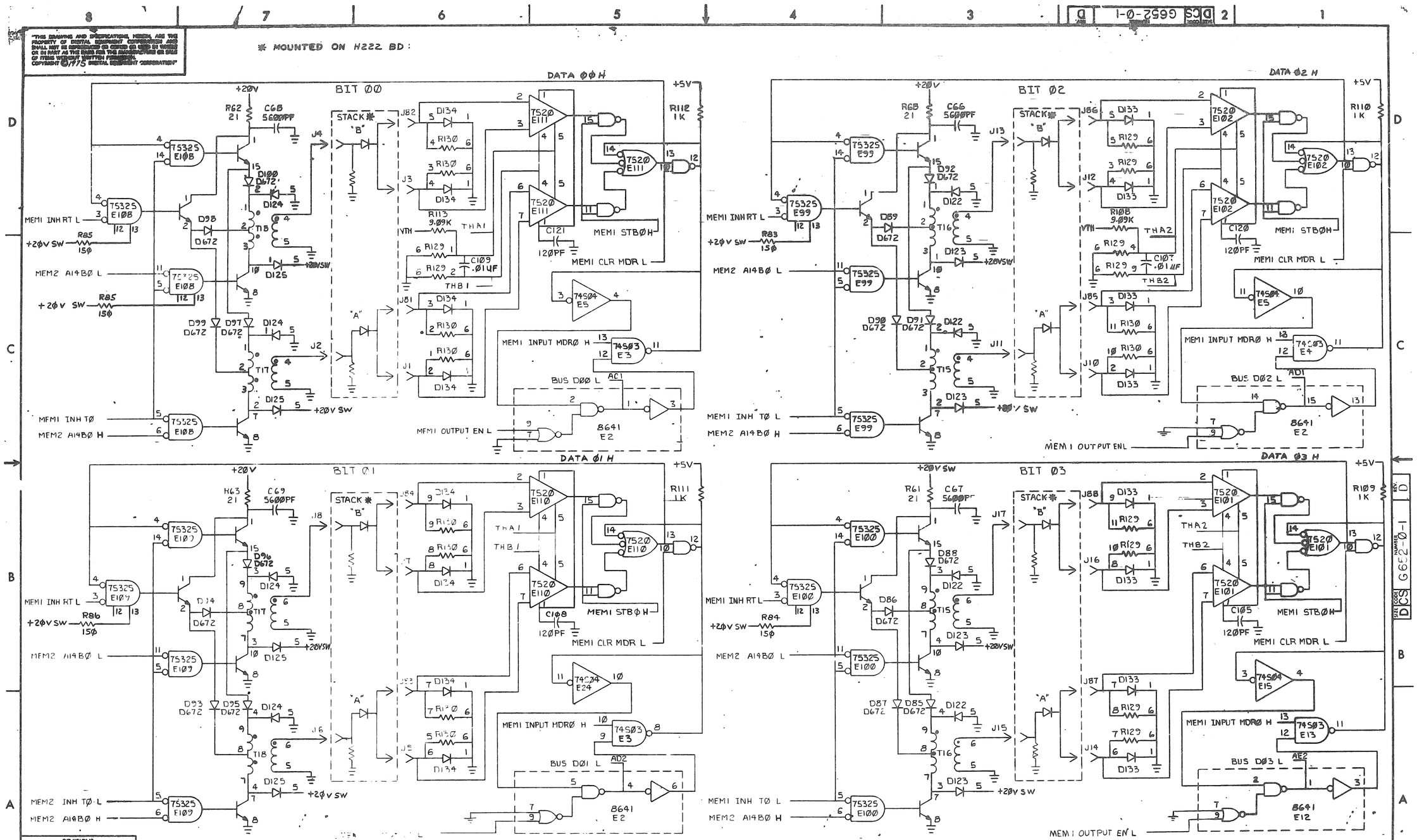

(SENSE & INHIBIT BITS 0-3)

REVISIONS		
CHK	CHANGE NO.	REV.

TITLE	SIZE	CODE	NUMBER	REV.
16K x 18 MEMORY ELECTRONICS (MEM5)	D	CS	G652-0-1	D

SCALE — SHEET 7 OF 11 DIST.

DEC FORM NO. DRD 138

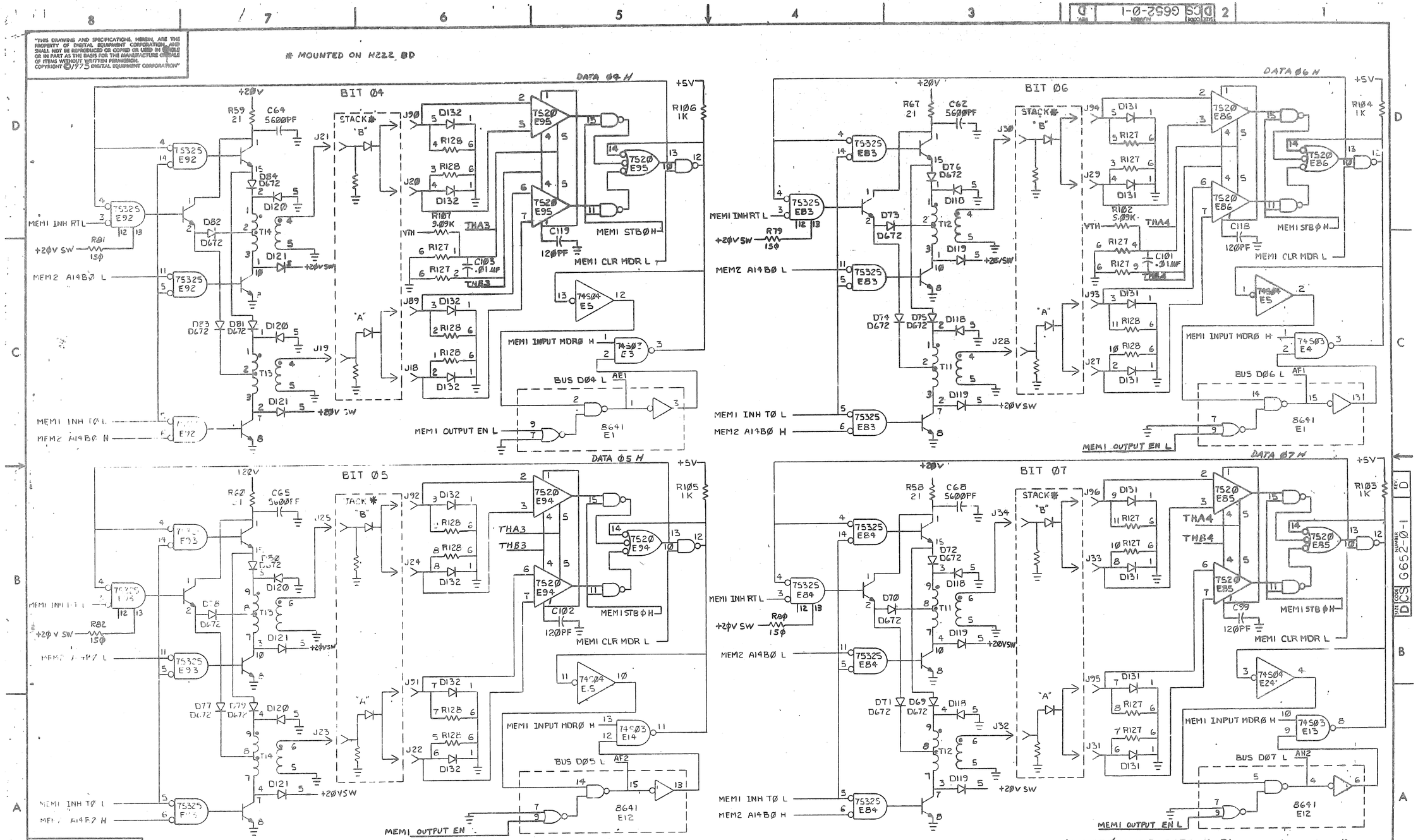

REVISIONS		
CHK	CHANGE NO.	REV.

TITLE 16K×18 MEMORY ELECTRONICS (MEM6)

SIZE D CODE CS NUMBER G652-Ø-1 REV. D

SCALE — SHEET 8 OF 11 DIST.

DEC FORM NO DPD 130

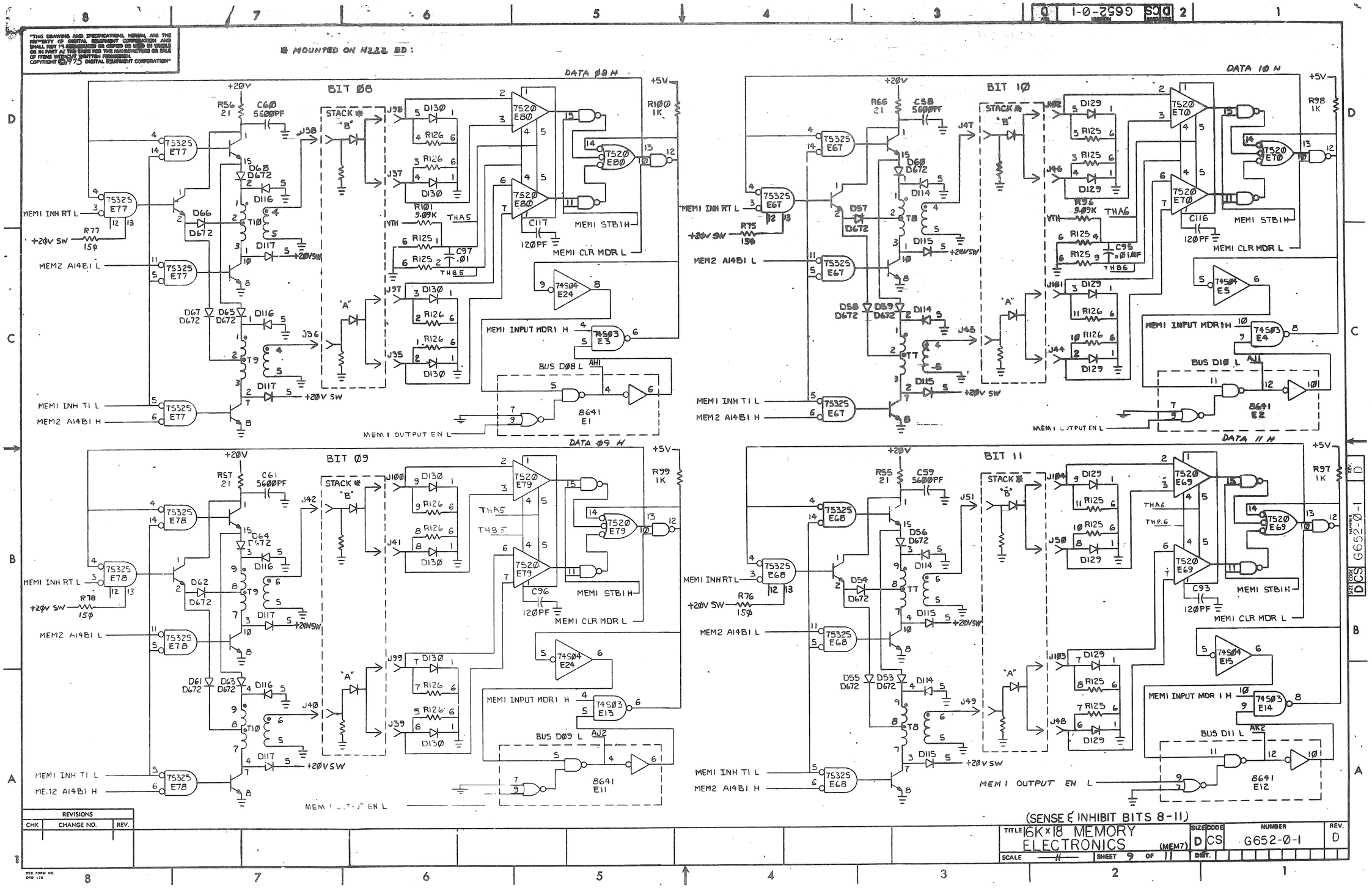

REVISIONS		
CHK	CHANGE NO.	REV.

TITLE	SIZE	CODE	NUMBER	REV.
16K x 18 MEMORY ELECTRONICS (MEM7)	D	CS	G652-Ø-1	D
SCALE —	SHEET 9 OF 11	DIST.		

DEC FORM NO. DRD 138

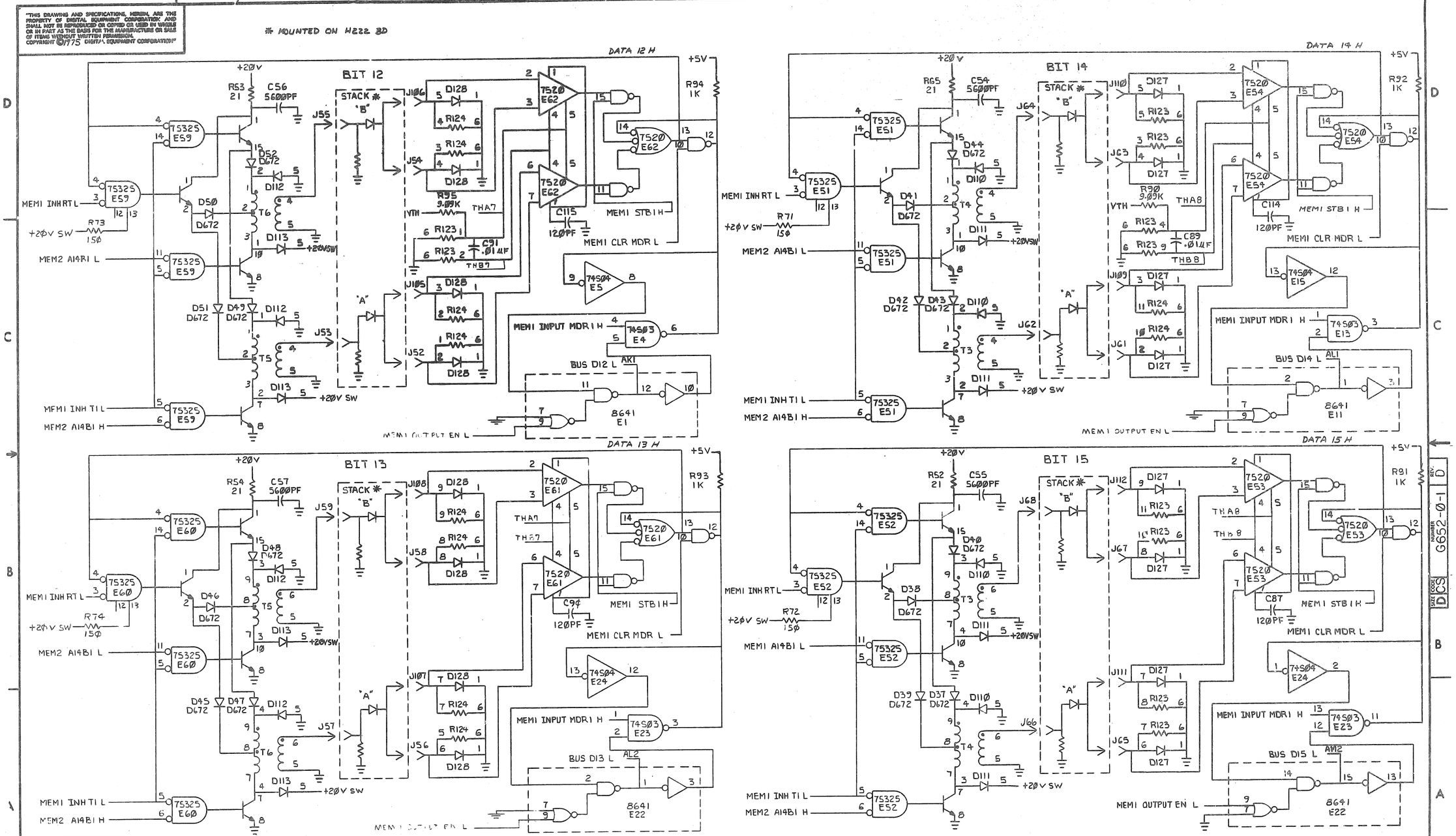

REVISIONS		
CHK	CHANGE NO.	REV.

TITLE	SIZE	CODE	NUMBER	REV.
16K x 18 MEMORY ELECTRONICS (MEM1)	D	CS	G652-0-1	D
SCALE —	SHEET 10 OF 11	DIST.		

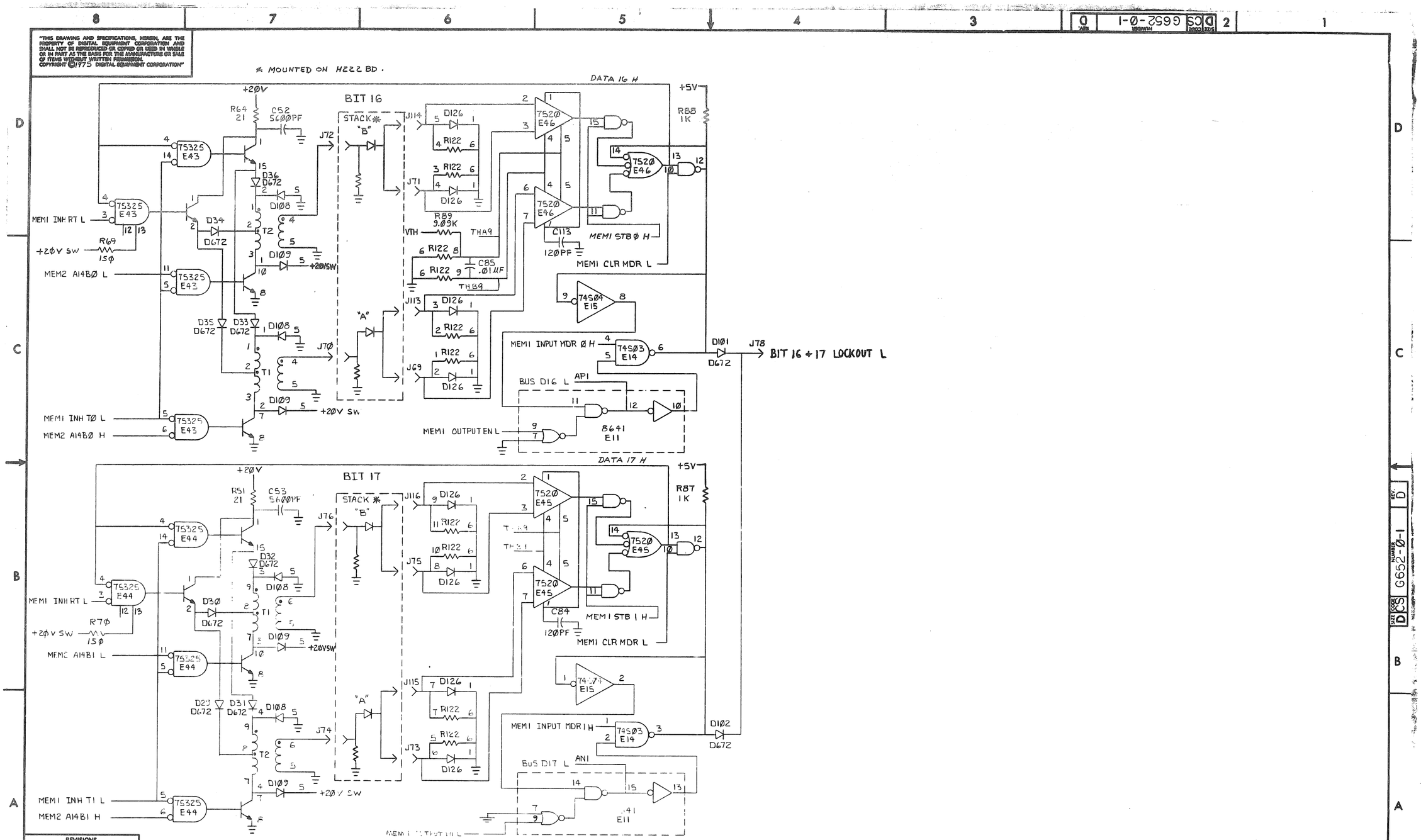

REVISIONS		
CHK	CHANGE NO.	REV.

(SENSE & INHIBIT BITS 16 & 17)

TITLE	SIZE	CODE	NUMBER	REV.
16K x 18 MEMORY ELECTRONICS (MEM9)	D	CS	G652-0-1	D
SCALE — / —	SHEET 1 OF 1	DIST.		

DEC FORM NO. DRD 138

DAT O

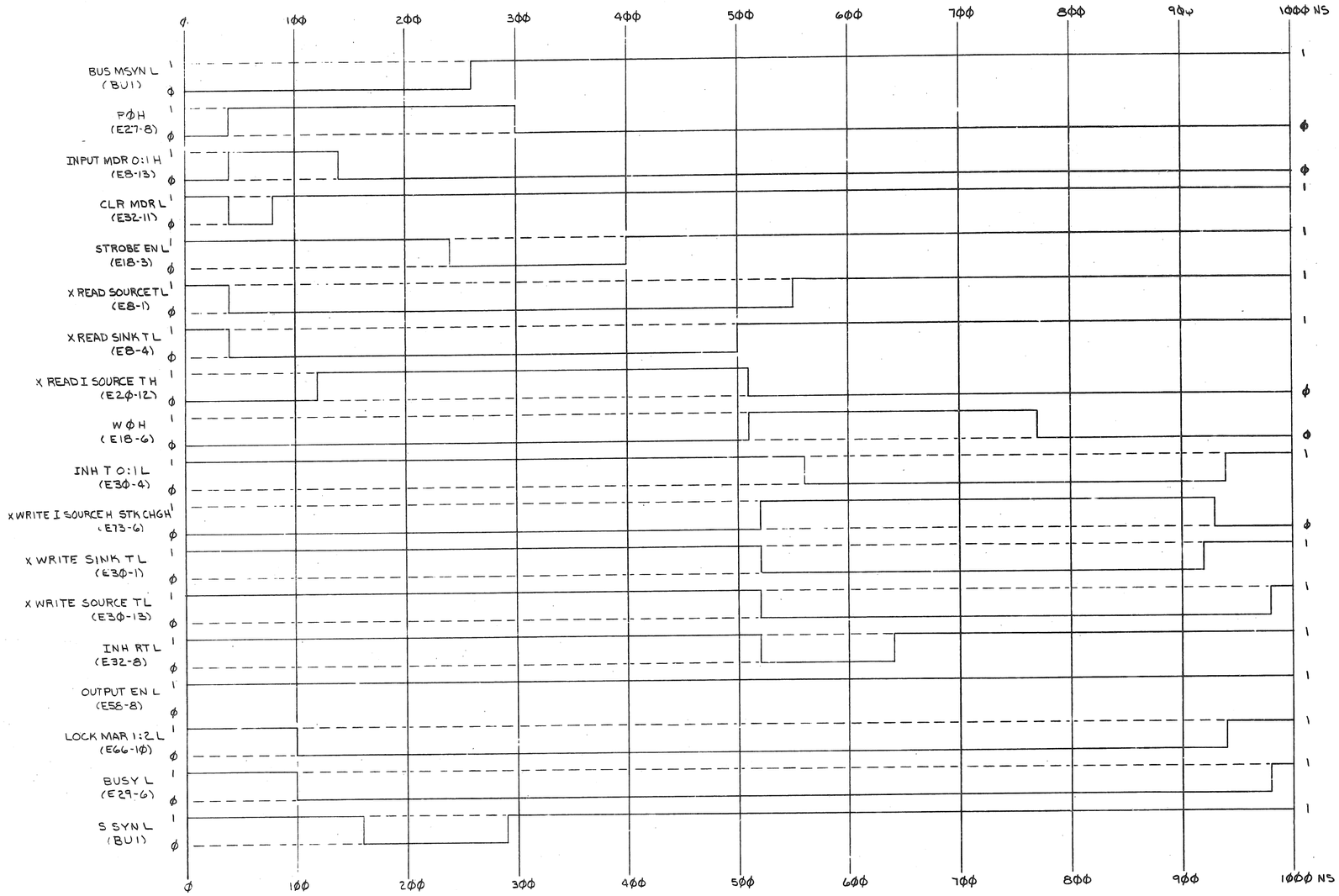

DRN. W. LUFKIN	16SEP1975	FIRST USED ON MMII-DP	digital
CHK'D W. Lufkin	28/OCT/75		
ENG. D. Lukhen	10/28/75	TITLE MMII-DP TIMING DIAGRAM	
PROJ. ENG. D. Lukhen	10/28/75		
PROD. R.A. Hile	22 OCT 75		
NEXT HIGHER ASSY. B-DD-MMII-DP		SIZE D / CODE TD / NUMBER MMII-DP-2 / REV.	
SCALE —			
SHEET 1 OF 2		DIST.	

REVISIONS: REV. / CHANGE NO. / CHK

DEC FORM NO. DRD 102-0

SIZE D / CODE TD / NUMBER MMII-DP-2 / REV.

DAT I

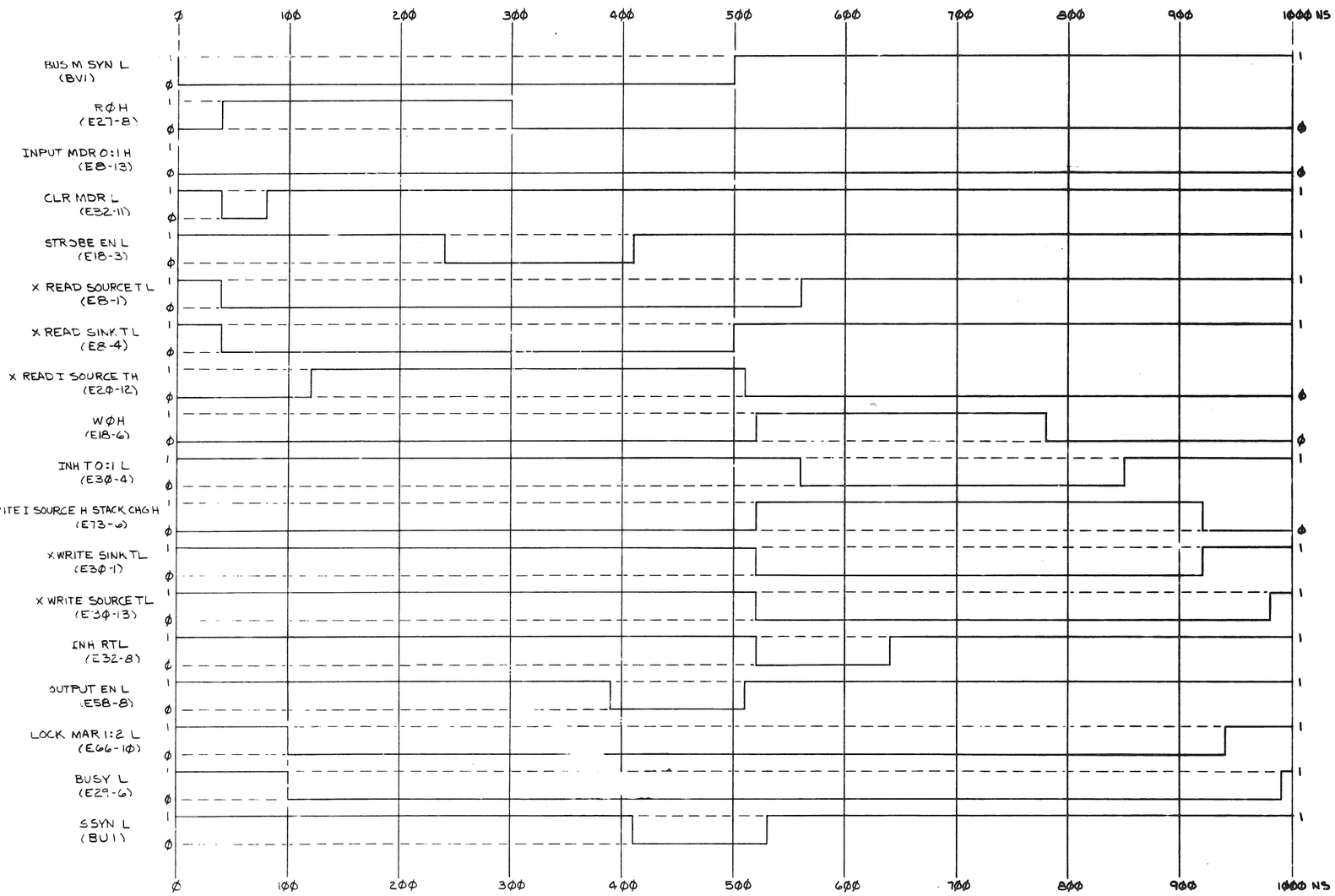

REVISIONS		
CHK	CHANGE NO.	REV

TITLE	SIZE	CODE	NUMBER	REV.
MMII-DP TIMING DIAGRAM	D	TD	MMII-DP-2	
SCALE —	SHEET 2 OF 2	DIST.		

DEC FORM NO. ORD 13F

NOTE :
1. MMII-DP MEMORY MODULE ASSEMBLY (16K X18BIT) MAY BE SUBSTITUTED FOR MMII-D MODULE (16KX16BIT)

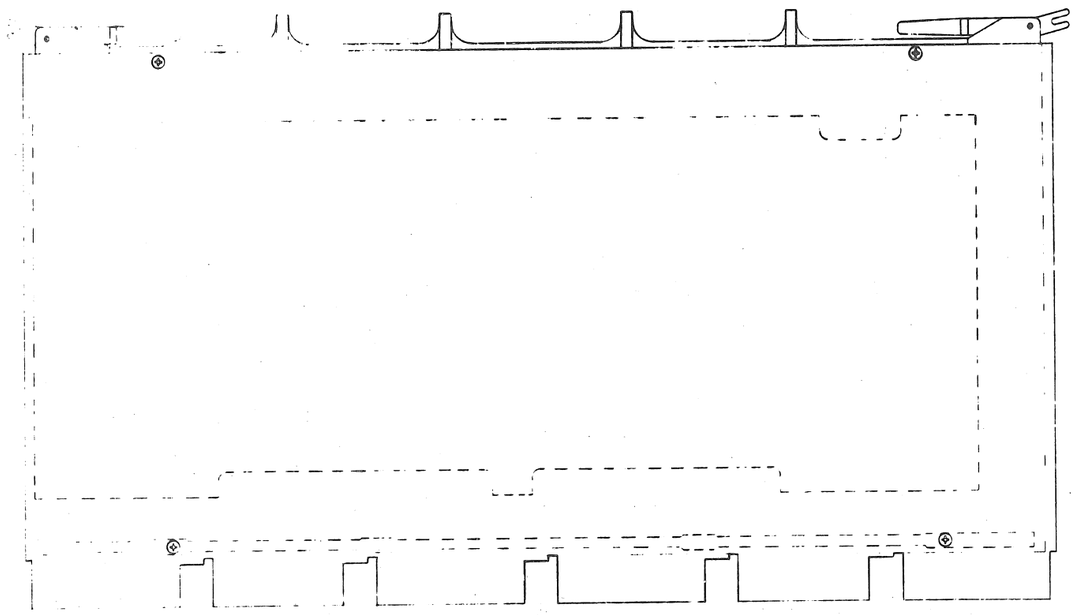

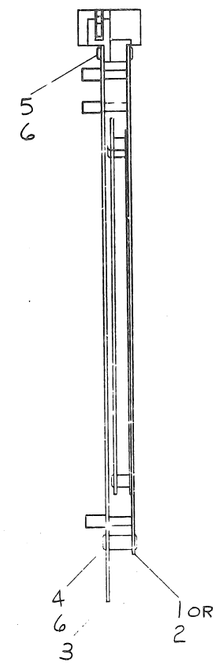

4	4	WASHER, LOCK #2 INT TOOTH	9006631-00	6
2	2	SCR, PHL PAN HD, SS #2-56 X .316	9006002-6	5
2	2	SCR, PHL PAN HD, SS #2-56 X .19	9006000-01	4
1	1	16K X18 CORE MEMORY	D-CS-3652-0-1	3
1		H222 STACK BOARD (16 BIT)	D-UA-H222-B-0	2
	1	H222 STACK BOARD (18 BIT)	D-UA-H222-A-0	1
MMII-D	MMII-DP	DESCRIPTION	DWG./PART NO.	ITEM NO.

UNLESS OTHERWISE SPECIFIED DIMENSIONS ARE IN INCHES

ANGLES ±0° 30'	CLASS OF ACCURACY (CHECK ONE)	NOMINAL DIMENSION RANGE INCHES: OVER 0 TO 0.3	OVER 0.3 TO 1.2	OVER 1.2 TO 4.0	OVER 4.0 TO 12.0	OVER 12.0 TO 40.0	OVER 40.0 TO 80.0
SURFACE QUALITY IN ✓ MICROINCHES	MEDIUM ☐	±.004	±.008	±.012	±.016	±.024	±.04
	PREFERRED ☐	±.012	±.016	±.025	±.04	±.063	±0.1

QUANTITY & VARIATION

THIRD ANGLE PROJECTION

REMOVE BURRS AND BREAK SHARP CORNERS

DO NOT SCALE DWG.

MATERIAL: SEE PARTS LIST

FINISH

DRN.	W. LUFKIN	7/29/75
CHK'D	[illegible]	8/21/75
ENG.	D. [illegible]	8/22/75
PROJ. ENG.	D. [illegible]	8/22/75
PROD.	R. A. Hill	8/26/75

NEXT HIGHER ASSY.: B-DD-MMII-DP

SCALE: 1/1

SHEET: 1 OF 1

FIRST USED ON: MMII-DP

digital

TITLE: MMII-DP MEMORY MODULE ASSEMBLY

SIZE	CODE	NUMBER	REV.
D	UA	MMII-DP-0	

DIST.

REVISIONS: REV. | CHANGE NO. | CHK

DEC FORM NO. DRD 100-C

digital EQUIPMENT CORPORATION MAYNARD MASSACHUSETTS

DRAWING DIRECTORY

CUSTOMER PRINT SET INDEX

SEQUENCE SEQUENCE

THIS IS PRINT SET

UNIT VARIATIONS		PRINT SET
VAR	TITLE	
H222-A	16K X 18 BIT DEC	
H222-B	16K X 16 BIT DEC	
H222-YA	16K X 18 BIT CONTROL DATA	
H222-YB	16K X 16 BIT CONTROL DATA	

REVISIONS		
DATE	CHG. NO.	REV
5-76	H222-1	A
2-77	H222-2	B

USED ON OPTION/MODEL

SHEET 1 OF 2

DRN. W. LUFKIN	DATE 10/28/75	TITLE H222 MEMORY STACK
CHK'D. W. Leighton	DATE 10/28/75	
PROJ ENG. D. Lumber	DATE 10/28/75	
PROD. RA Hill	DATE 10/29/75	SIZE B / CODE DD / NUMBER H222-Ø / REV B
FIELD SERV.	DATE 11/4/75	DIST

DEC 16-13251-106-1A-R977

DRB 106

ELECTRICAL

CUSTOMER PRINT SET	MFG.	FIND NO.	DRAWING NO.	REV	NO OF SHT	DESCRIPTION	OPTION NO./FILE DATE
			B-DD-H222-Ø		2	DRAWING DIRECTORY	
			D-CS-5411554-0-1			H222 STACK BOARD	
			E-IA-7011661-0-0		2	CORE PLANE WIRING ASSEMBLY	

MECHANICAL

CUSTOMER PRINT SET	MFG SET	FIND NO.	DRAWING NO.	REV	NO OF SHT	DESCRIPTION	OPTION NO./FILE DATE
			D-UA-H222-A-0		1	H222 CORE MEMORY STACK ASSY	
			D-PA-1211725-0-0		1	STIFFENER, FINGER END	
			D-PS-1211726-0-0		1	STIFFENER, HANDLE END	
			D-MD-5511796-0-0		1	CORE SUPPORT (16K x 16/18 BIT)	
			D-MD-5511797-0-0		1	COVER (16K X 16/18 BIT)	
			A-PL-5411554-0-0			PARTS LIST	
			D-AH-5411554-C-5			MEMORY STACK SUB	

CUSTOMER PRINT SET CODES
X = PRINT OF DOCUMENT INCLUDED IN PRINT SET
C = INCLUDES ALL PRINTS INDICATED ON DOCUMENT
S = CONFIDENTIAL AUTHORIZED SIGNATURE REQUIRED

TITLE	SHEET	SIZE	CODE	NUMBER	REV
H222 MEMORY STACK	2 OF 2	B	DD	H222-Ø	B

DRB 108

NOTE:
PREFIX FOR J156-J179 IS MEM4.

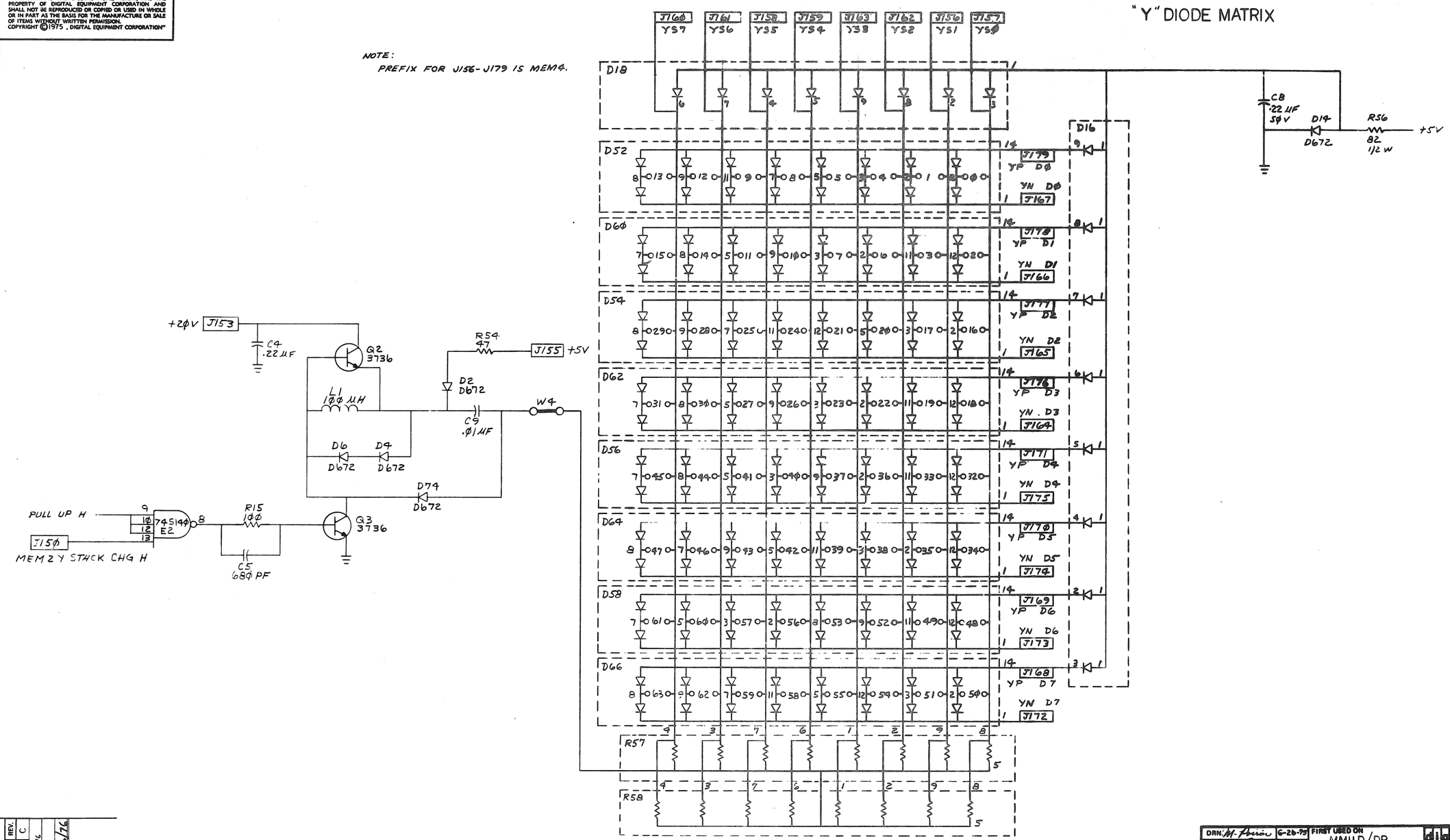

REVISIONS			
CHK	CHANGE NO.	REV.	
	E-11554-0000.	C	
	D.SMELCER		
			6/16/76

DEC FORM NO. DRD 102-D

DRN.	6-26-75	FIRST USED ON MMIID/DP	digital
CHK'D		TITLE 16K X 16, 18 MEMORY STACK	
ENG.			
PROJ. ENG.			
PROD.			
NEXT HIGHER ASSY. D-UA-H222-0		SIZE D	CODE CS
SCALE —		NUMBER 5411554-0-1	REV. C
SHEET 1 OF 3		DIST.	

D CS 5411554-0-1 C

"X" DIODE MATRIX

NOTE:
PREFIX FOR J117-J148 IS MEM9.

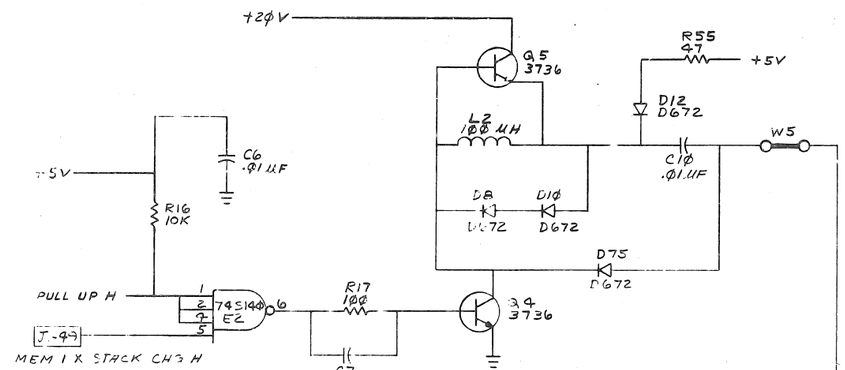

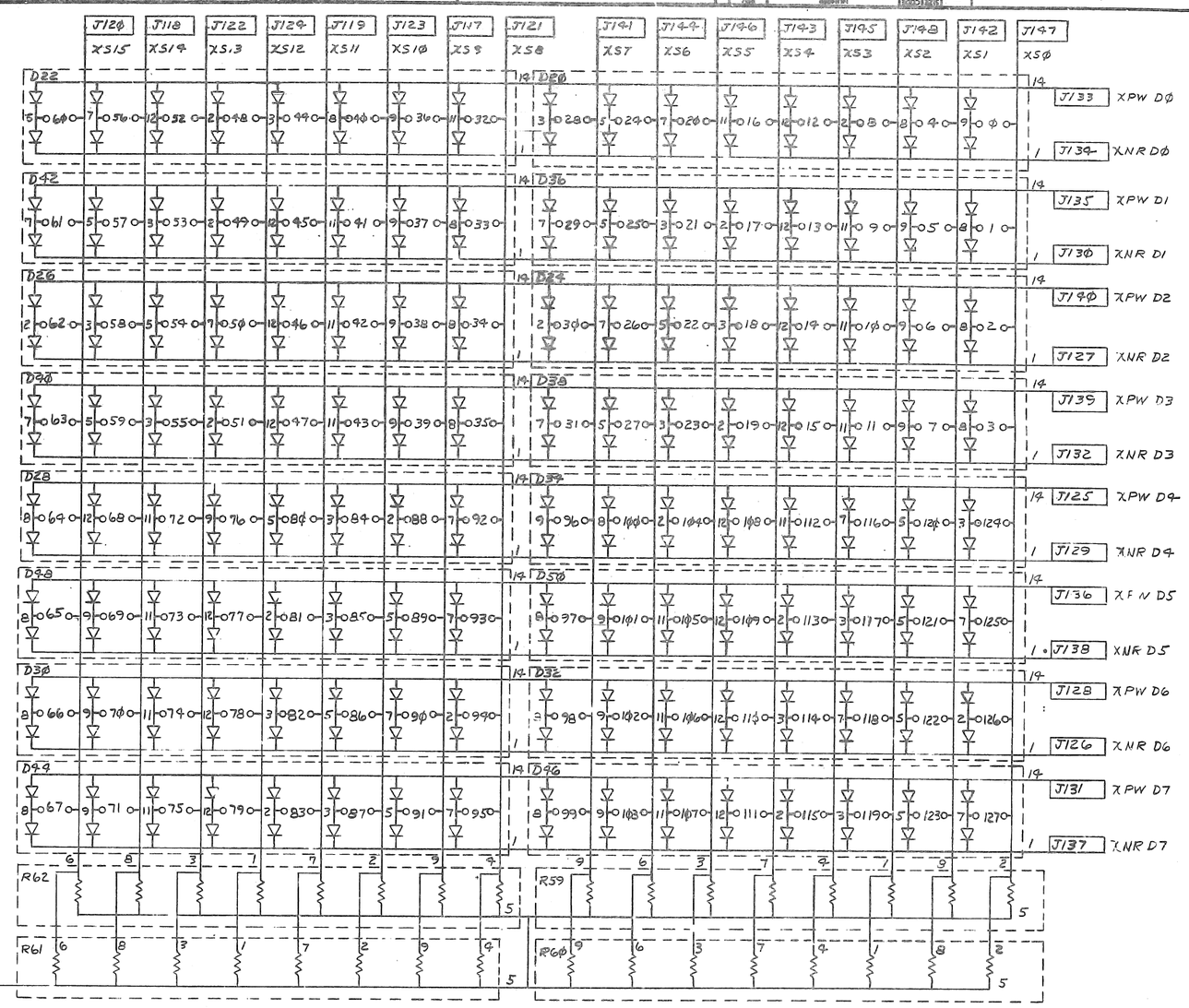

REVISIONS		
CHK	CHANGE NO.	REV.

TITLE	SIZE	CODE	NUMBER	REV.
16K X 16, 18 MEMORY STACK	D	CS	5411554-0-1	C
SCALE —	SHEET 2 OF 3	DIST.		

DEC FORM NO. GRD 130

NOTES:
1. R18 THRU R53 ARE 1K, 1/4W ±5%.
2. UNLESS OTHERWISE SPECIFIED: ALL DIODES ARE D672.
3. W3 MUST BE INSTALLED FOR A 16 BIT MEMORY -- H222B, OR H222A USED WITHOUT A PARITY CONTROLLER (M7850).
4. W1 & W2 ARE USED TO ADJUST VREF

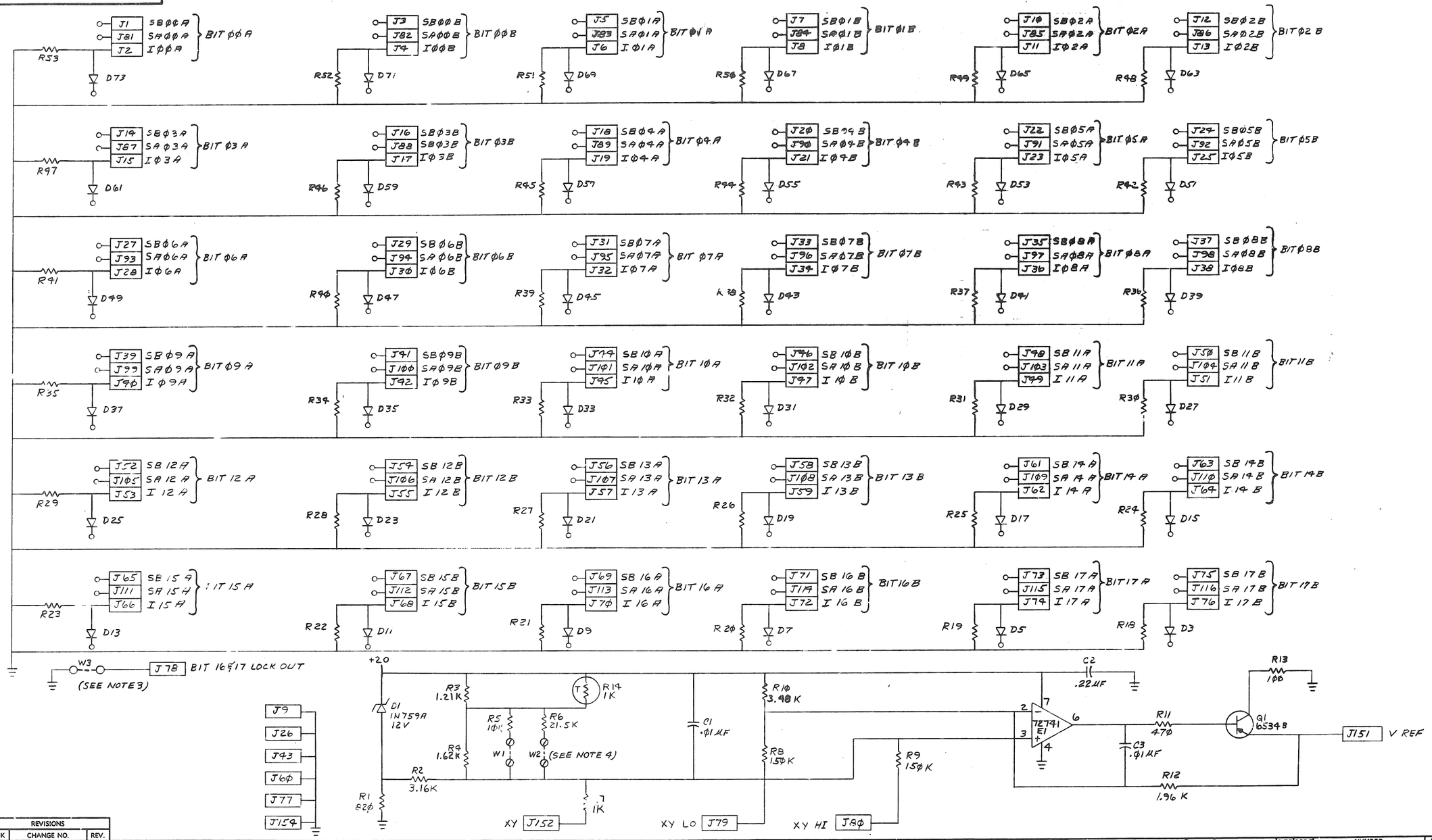

REVISIONS		
CHK	CHANGE NO.	REV.

TITLE	SIZE	CODE	NUMBER	REV.
16K X 16, 18 MEMORY STACK	D	CS	5411554-0-1	C
SCALE —	SHEET 3 OF 3		DIST.	

DEC FORM NO. ORD 130

LEGEND			
NUMBER	NUMBER	VARIATION	USED ON
H222-YA	H222-A	16K X 18 BIT	MM11-DP
H222-YB	H222 B	16K X 16 BIT	MM11-D

NOTES:

1. BOND ITEM 1 (CORE PLANE) TO ITEM 3 (STACK BOARD) WITH ITEM 14 (ADHESIVE).
2. SWAGE ITEM 1 (CORE PLANE) AND ITEM 3 (STACK BOARD) TOGETHER WITH ITEM 7 (STANDOFF).
3. USE ITEM 15 (PROTECTIVE COATING) TO COAT ALL MAGNETIC WIRE TERMINATIONS AFTER ELECTRICAL TEST. (REF E-IA-7011661-0-0)
4. BOND TWISTED CABLES TO ITEM 1 (CORE PLANE) WITH ITEM 13 (ADHESIVE). SEE E-IA-7011661-0-0.
5. BOND X & Y DRIVE LOOPS IN PLACE WITH ITEM 13 (ADHESIVE). SEE E-IA-7011661-0-0 NOTES
6. REFER TO E-IA-7011661-0-0 WHEN SOLDERING WIRE TERMINATIONS TO ITEM 3 (STACK BOARD).
7. ASSEMBLE ITEMS 9 & 10 (STIFFENERS) TO ITEM 3 (STACK BOARD) USING ITEMS 6 & 17.
8. ATTACH ITEM 8 (COVER) TO ITEM 3 (STACK BOARD) USING ITEM 5 (NYLON SCREW).
9. APPLY ITEM 11 (WARRANTY SEAL) WHERE SHOWN.
10. APPLY ITEM 12 (NAME PLATE) TO SIDE 2 OF ITEM 3 (STACK BOARD) AS SHOWN.
11. MARK ITEM 3 (STACK BOARD) ON SIDE 2 WITH DEC PART NUMBER, SEQUENTIAL SERIAL NUMBER, AND CIRCUIT SCHEMATIC REVISION USING ITEM 4 (INK) AND ITEM 16 (EPOXY). EXAMPLE: H222-A-001-CS-B.
12. TRIM AMP POSTS AND COMPONENT LEADS TO BE .05 IN THIS AREA OF SIDE 2.
13. INSTALL ITEM 17 (LOCKWASHER) "TORQUE HAND TIGHT".

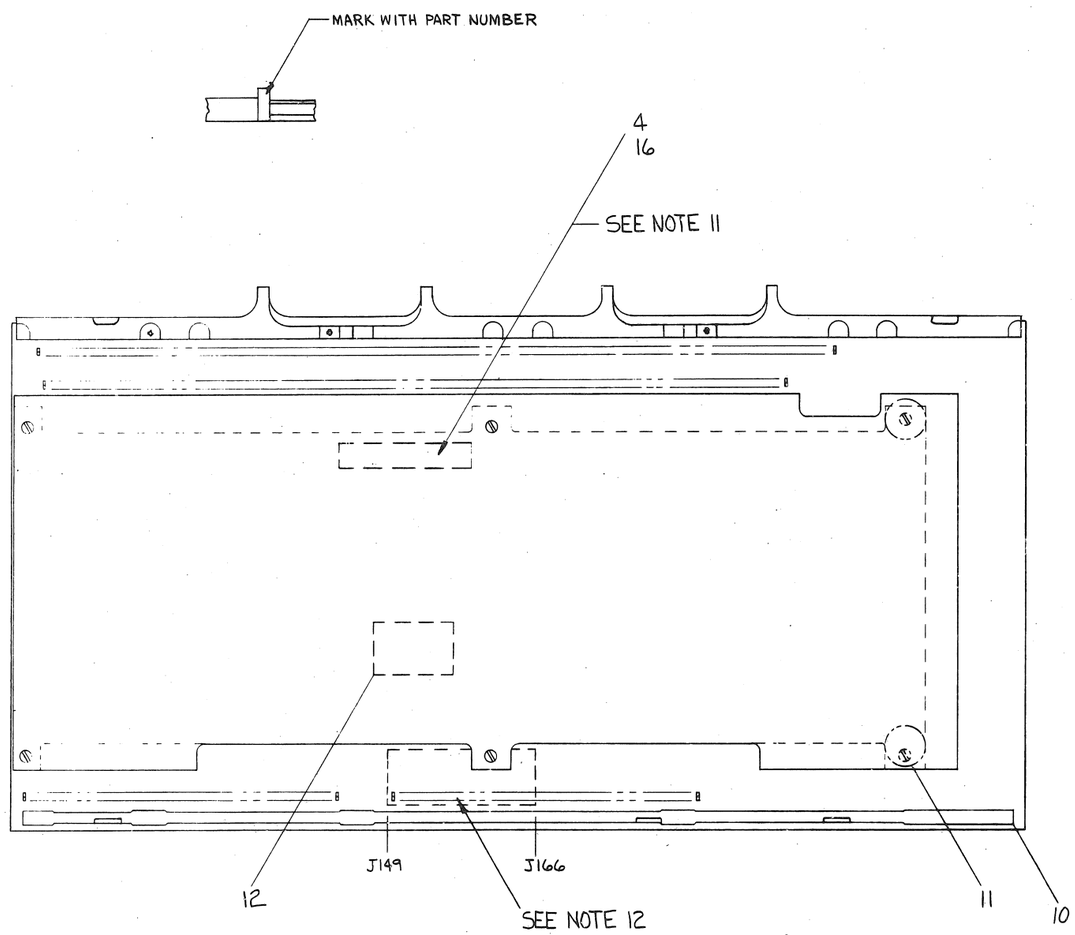

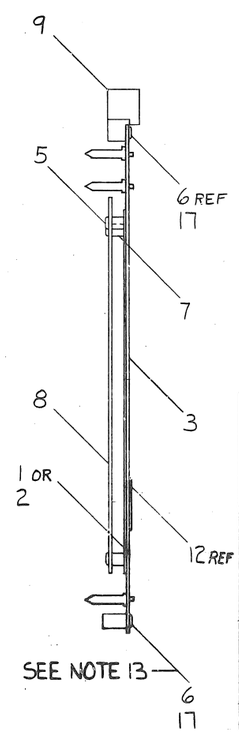

1	–	–	–	CORE PLANE WIRING ASSY.	E-IA-7011661-3-0	19
1	1	–	–	CORE PLANE WIRING ASSY.	E-IA-7011661-2-0	18
8	8	8	8	WASHER, LOCK #2 INT TOOTH	9006631-00	17
A/R	A/R	A/R	A/R	EPOXY	4901082-00	16
A/R	A/R	A/R	A/R	PROTECTIVE COATING (F145)	4901083-00	15
A/R	A/R	A/R	A/R	ADHESIVE (RTV 3145)	4901086-00	14
A/R	A/R	A/R	A/R	ADHESIVE (RTV 3140)	4901085-00	13
1	1	1	1	NAME PLATE	~~9009238-00~~	12
2	2	2	2	WARRANTY SEAL		11
1	1	1	1	STIFFENER, FINGER END	D-PS-1211725-0-0	10
1	1	1	1	STIFFENER, HANDLE END	D-PS-1211726-0-0	9
1	1	1	1	COVER	D-MD-5511797-0-0	8
6	6	6	6	STANDOFF .25 DIA X .19 LG	9009677-00	7
8	8	8	8	SCR, PHL PAN HD SS #2-56 X .19	9006000-01	6
6	6	6	6	SCR, SLT BNDR HD NYLON #4-40 X .19	9009233-04	5
A/R	A/R	A/R	A/R	INK, BLACK	4901084-00	4
1	1	1	1	H222 STACK BOARD	5411554	3
–	–	1	–	CORE PLANE WIRING ASSY	E-IA-7011661-1-0	2
–	–	–	1	CORE PLANE WIRING ASSY	E-IA-7011661-0-0	1
H222-YB	H222-YA	H222B	H222A	DESCRIPTION	DWG./PART NO.	ITEM NO.

QUANTITY & VARIATION

UNLESS OTHERWISE SPECIFIED DIMENSIONS ARE IN INCHES

ANGLES ±0° 30'

SURFACE QUALITY IN MICROINCHES

CLASS OF ACCURACY (CHECK ONE)	NOMINAL DIMENSION RANGE INCHES: OVER 0 TO 0.3	OVER 0.3 TO 1.2	OVER 1.2 TO 4.0	OVER 4.0 TO 12.0	OVER 12.0 TO 40.0	OVER 40.0 TO 80.0
MEDIUM	±.004	±.008	±.012	±.016	±.024	±.04
PREFERRED	±.012	±.016	±.025	±.04	±.063	±0.1

THIRD ANGLE PROJECTION

REMOVE BURRS AND BREAK SHARP CORNERS

DO NOT SCALE DWG

MATERIAL: SEE PARTS LIST

FINISH —

DRN. W. LUFKIN	7/17/75	FIRST USED ON MM11-DP
CHK'D	8/21/75	digital
ENG.	8/22/75	TITLE H222 CORE MEMORY STACK ASSEMBLY
PROJ. ENG.	8/22/75	
PROD.	8/22/75	
NEXT HIGHER ASSY.	D-UA-MM11-DP-0	
SCALE	1/1	SIZE D CODE UA NUMBER H222-0-0 REV. A
SHEET	1 OF 1	DIST.

REVISIONS

CHK	CHANGE NO.	REV.
KH	H-222-00000	A

D. SMELSER 2/16/77

DEC FORM NO. DRD 100-C

NOTES:

1. ALL RESISTORS 1/4 W, 5% UNLESS OTHERWISE NOTED.
   ALL CAPACITORS ARE 100V, 20% UNLESS OTHERWISE NOTED.
2. JUMPER CONTROL OPERATIONS AS FOLLOWS:
   W1 THRU W4 SELECT CSR ADDRESS, W5 CAPACITOR FOR 5 SYN DLY, NOT USED.
3. E32 IS A SPARE LOCATION.

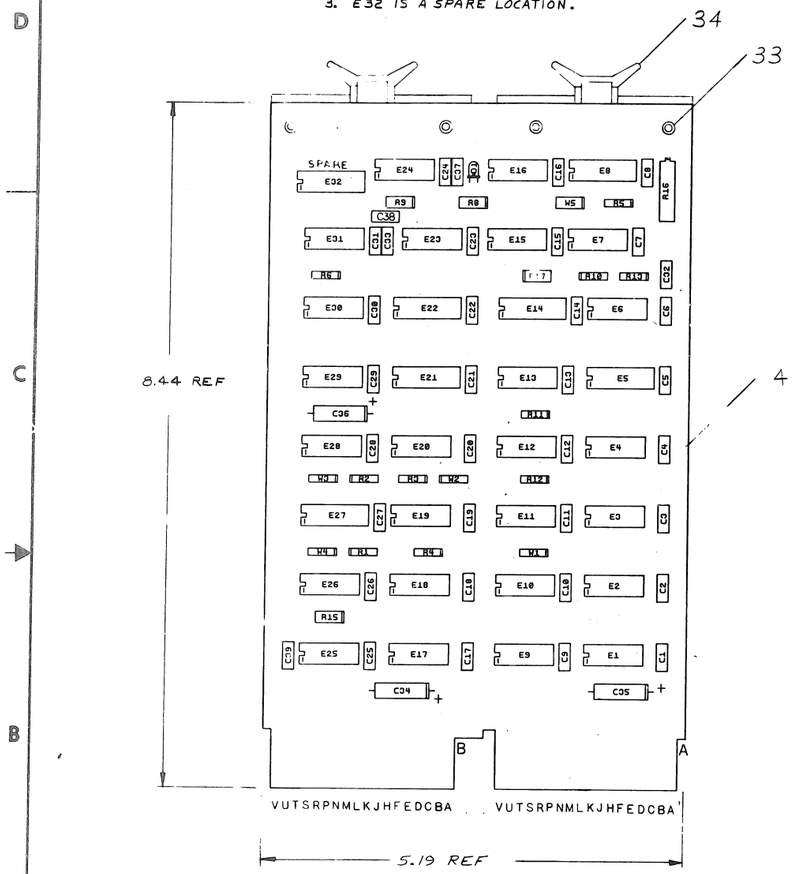

SPARES:

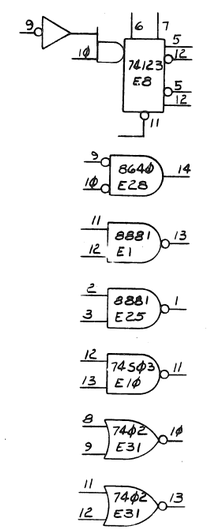

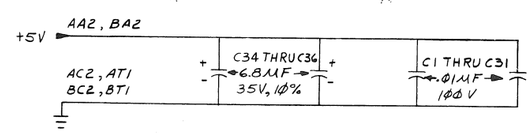

REF		CIRCUIT SCHEMATIC	D-CS-M7850-0-1	REF
REF		X-Y COORDINATE HOLE LOCATION	K-CO-M7850-0-4	1
REF		ASSY/DRILLING HOLE LAYOUT	D-AH-M7850-0-5	2
REF		MODULE ECO HISTORY	B-MH-M7850-0-6	3
1		ETCHED CIRCUIT BOARD	5010651-00	4
1	C39	CAP 470 PF, 100V, 5% (DM)	1000024-00	5
2	C33, C37	CAP 330 PF, 100V, 5% (DM)	1000023-00	6
32	C1 THRU C32	CAP .01 UF, 100 V, 20% DISC	1001610-01	7
3	C34, C35, C36	CAP 6.8 UF, 35V, 10% S.TANT	1005306-00	8
1	D1	DIODE, L.E.D.	1110324-00	9
5	R1 THRU R5	RES 4.7K 1/4W 5%	1300447-00	10
3	R8, R9, R15	RES 100 1/4W 5%	1300229-00	11
5	R6, R10, R11, R12, R17	RES 470 1/4W 5%	1300316-00	12
1	R13	RES 1K 1/4W 5%	1300365-00	13
1	R16	RES 10K 3/4W 2% (76 PR.RST)	1309143-10	14
1	E24	I.C. 7400	1905575-00	15
1	E30	I.C. 7430	1905578-00	16
1	E31	I.C. 7402	1909004-00	17
1	E19	IC. 314A	1909704-00	18
1	E23	IC. 7408	1910155-00	19
4	E1, E9, E17, E25	I.C. 8881	1909705-00	20
1	E16	I.C. 74H04	1909931-00	21
1	E27	I.C. 7485	1910224-00	22
1	E8	I.C. 74123	1910436-00	23
1	E10	I.C. 74503	1910533-00	24
1	E15	I.C. 74574	1910544-00	25
1	E21	I.C. 74174	1910652-00	26
2	E5, E22	I.C. 74157	1910655-00	27
9	E2, E3, E11, E12, E18 E20, E26, E28, E29	I.C. 8640	1911469-00	28
2	E4, E13	I.C. 74S280	1911573-00	29
1	E14	I.C. 8266	1909934-00	30
2	E6, E7	I.C. 7474	1905547-00	31
4	W1 THRU W4	INSULATED JUMPER	9009185-00	32
4		EYELET	9006732-00	33
2		HANDLE, FLIPCHIP (MAGENTA)	9008337-6	34

QTY | REF. DESIGNATION | DESCRIPTION | PART NO. | ITEM NO.

PARTS LIST

FIRST USED ON OPTION MODEL

ETCH BOARD REV. B

8640	1	5
8266	8	16
7407	6	16
7414	3	16
[illegible]	8	16
4[illegible]	8	16
7[illegible]	1	5
IC TYPE	GND	+5V

GND AND 5V ARE USUALLY PIN 7 AND 14 RESPECTIVELY EXCEPTIONS ARE STATED ABOVE

IC PIN LOCATIONS

DEC NO.	EIA NO.	DEC NO.	EIA NO.

SEMICONDUCTOR CONVERSION CHART

REVISIONS: REV. B — CHANGE NO. M7950 00001 — CHK J. MANTON 4/13/75

DRN. W. LUFKIN DATE 2-5-75
CHK'D. DATE 2/17/75
ENG. DATE 2/28/75
PROJ. ENG. DATE 2/28/75
PROD. DATE 2/28/75
NEXT HIGHER ASSY
SCALE
SHEET 1 OF 3

digital

TITLE PARITY MODULE

SIZE D CODE CS NUMBER M7850-0-1 REV. B
DIST.

DCS M7850-0-1 B

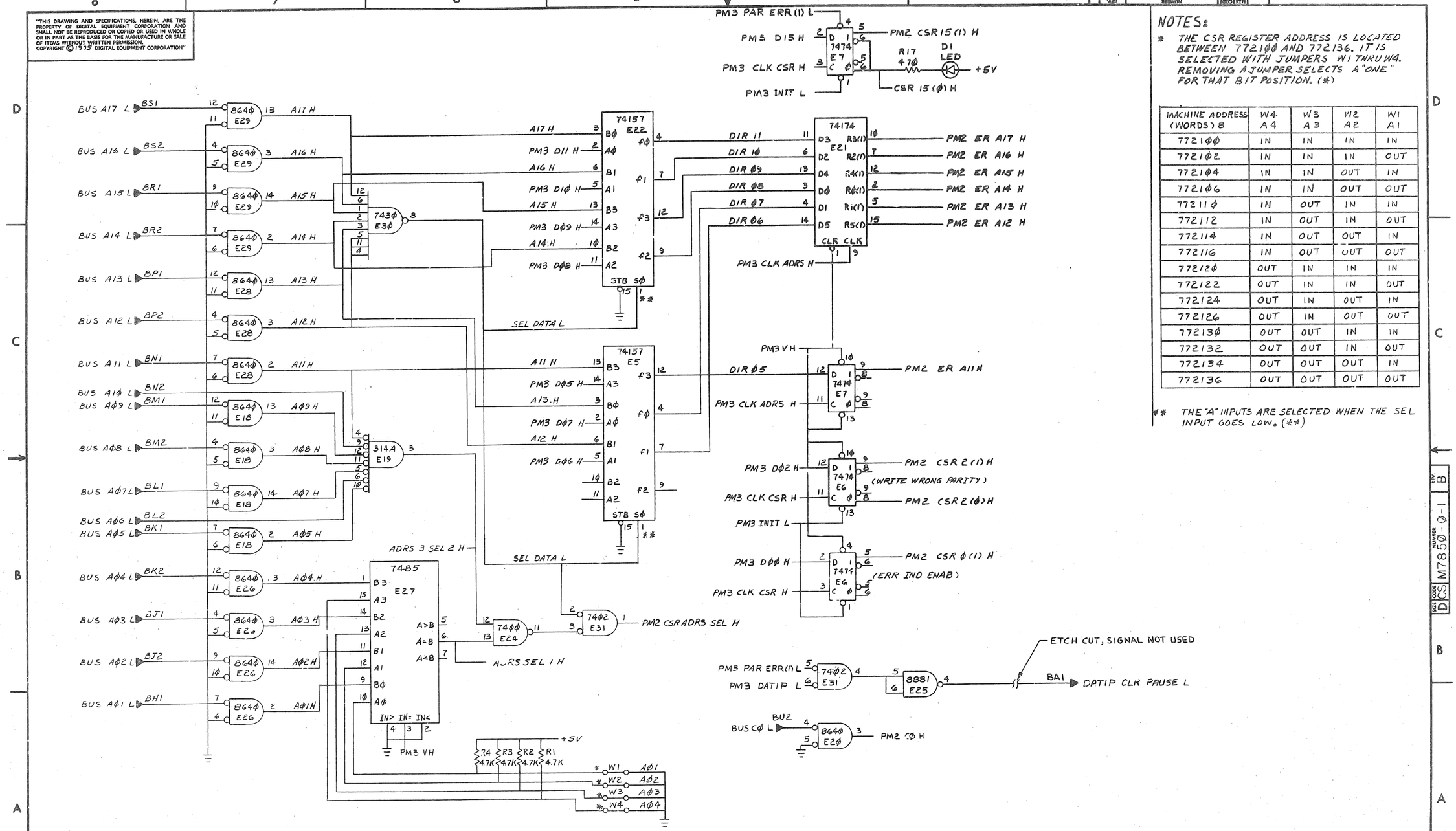

NOTES:

* THE CSR REGISTER ADDRESS IS LOCATED BETWEEN 772100 AND 772136. IT IS SELECTED WITH JUMPERS W1 THRU W4. REMOVING A JUMPER SELECTS A "ONE" FOR THAT BIT POSITION. (*)

MACHINE ADDRESS (WORDS) 8	W4 A4	W3 A3	W2 A2	W1 A1
772100	IN	IN	IN	IN
772102	IN	IN	IN	OUT
772104	IN	IN	OUT	IN
772106	IN	IN	OUT	OUT
772110	IN	OUT	IN	IN
772112	IN	OUT	IN	OUT
772114	IN	OUT	OUT	IN
772116	IN	OUT	OUT	OUT
772120	OUT	IN	IN	IN
772122	OUT	IN	IN	OUT
772124	OUT	IN	OUT	IN
772126	OUT	IN	OUT	OUT
772130	OUT	OUT	IN	IN
772132	OUT	OUT	IN	OUT
772134	OUT	OUT	OUT	IN
772136	OUT	OUT	OUT	OUT

** THE "A" INPUTS ARE SELECTED WHEN THE SEL INPUT GOES LOW. (**)

REVISIONS		
CHK	CHANGE NO.	REV.

TITLE: PARITY MODULE (PM2)
SIZE D CODE CS NUMBER M7850-Ø-1 REV. B
SCALE — SHEET 2 OF 3 DIST.

NOTES:

* B INPUTS SELECTED WHEN SEL IS LOW (*)

** SET R16 TO 110 NSEC. ± 10 NS FROM SIGNAL ON PIN BE1 GOING LOW TO SIGNAL ON PIN BB2 GOING HIGH. (@ 1.5V LEVEL) (**)

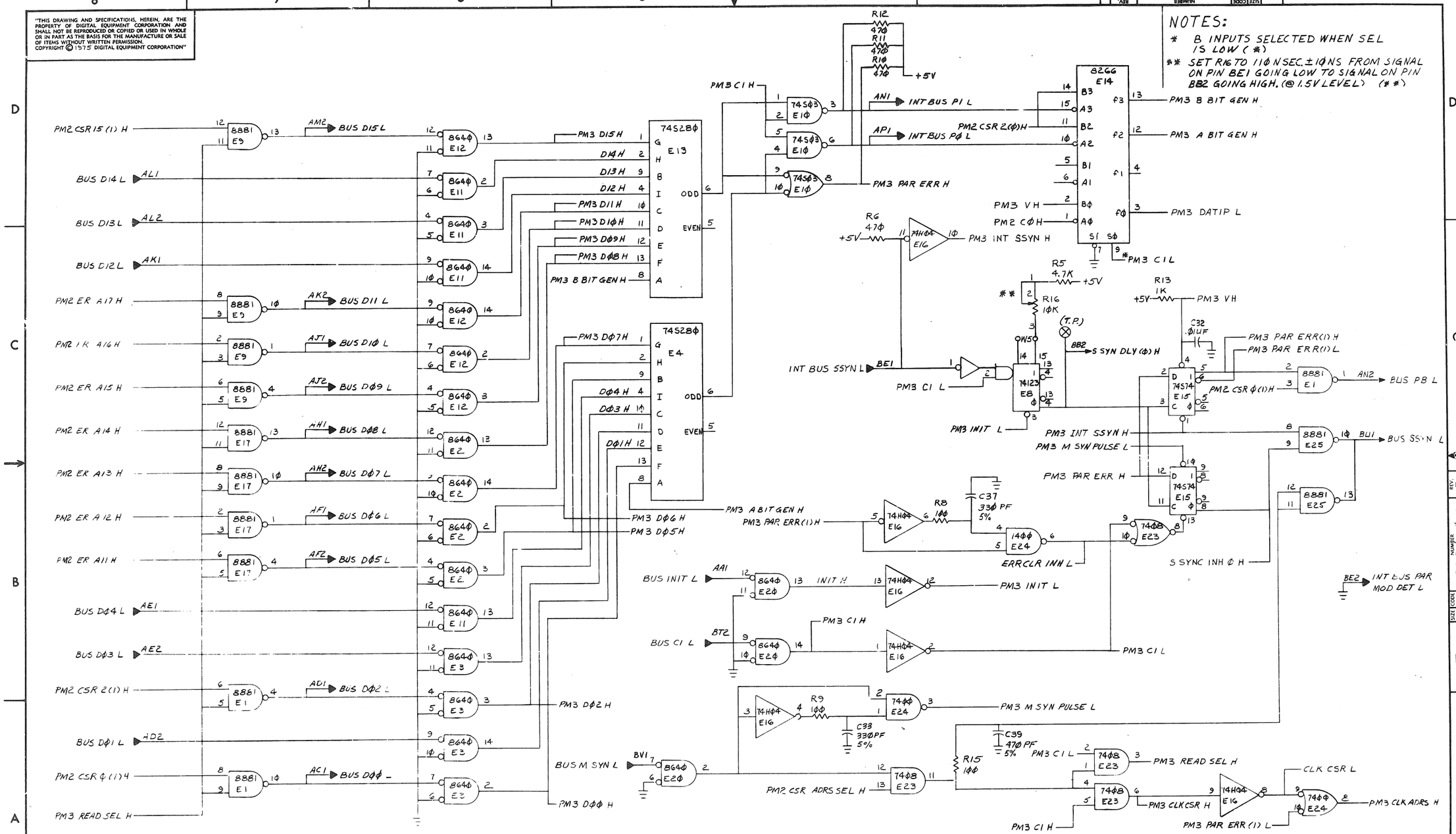

REVISIONS		
CHK	CHANGE NO.	REV.

TITLE	SIZE	CODE	NUMBER	REV.
PARITY MODULE (PM3)	D	CS	M7850-0-1	B
SCALE	SHEET 3 OF 3	DIST.		

DEC FORM NO DRI 138